TOFTREES PLANNED COMMUNITY WEST

MOUNT NITTANY HEALTH OUTPATIENT CENTER

FINAL LAND DEVELOPMENT PLAN

PATTON TOWNSHIP * CENTRE COUNTY * PENNSYLVANIA

NOVEMBER 5, 2021

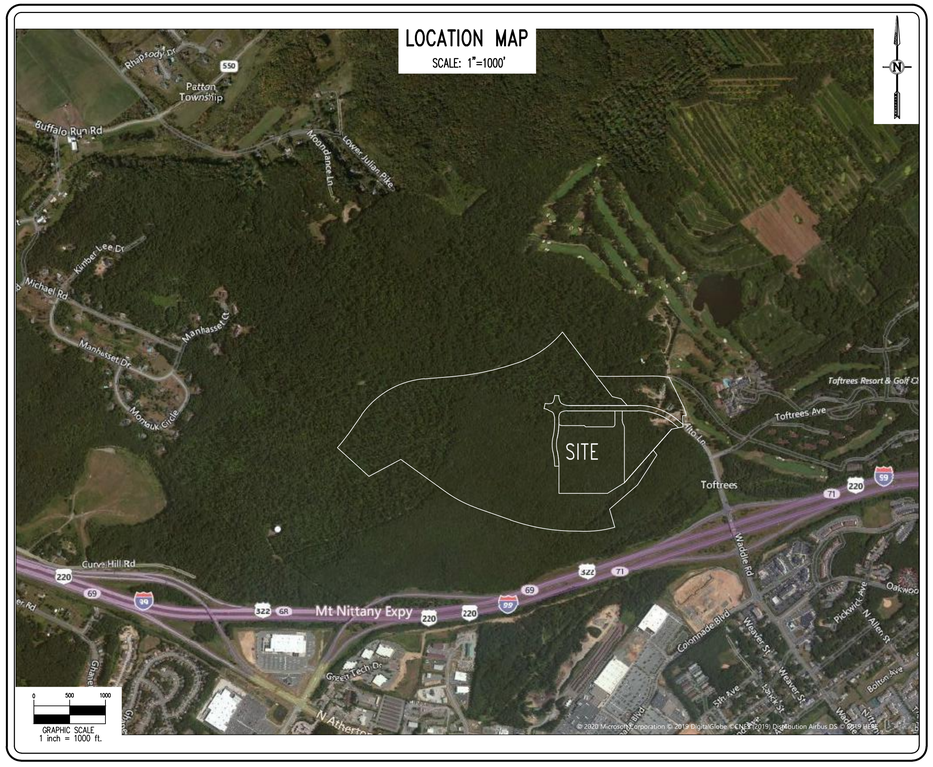

PennTerra ENGINEERING, INC.

CENTRAL PENNSYLVANIA REGION OFFICE:
3075 ENTERPRISE DRIVE
SUITE 100
STATE COLLEGE, PA 16801
PH: 814-231-8285
Fax: 814-237-2308

LANCASTER REGION OFFICE:
3904 B ABEL DRIVE
COLUMBIA, PA 17512
PH: 717-522-5031
Fax: 717-522-5046

WWW.PENNTERRA.COM

COPYRIGHT 2021 BY THE ENGINEER

THE INFORMATION CONTAINED HEREON MAY NOT BE USED OR COPIED IN ANY MANNER WITHOUT THE WRITTEN PERMISSION OF THE ENGINEER EXCEPT AS OTHERWISE PROVIDED BY APPROPRIATE LAWS OR STATUTES.

© PENNTERRA ENGINEERING 2021 ALL RIGHTS RESERVED

ACT 287 UTILITY INFORMATION (SERIAL NUMBER: 20200241040)

SANITARY SEWER
UNIVERSITY AREA JOINT AUTHORITY
1576 SPRING VALLEY ROAD
STATE COLLEGE, PA 16801
PHONE: (814) 238-9662

PUBLIC WATER
STATE COLLEGE BOROUGH WATER AUTHORITY
1201 WEST BRANCH ROAD
STATE COLLEGE, PA 16801
PHONE: (814) 238-6766

NATURAL GAS
COLUMBIA GAS OF PENNSYLVANIA
2550 CAROLEAN INDUSTRIAL DRIVE
STATE COLLEGE, PA 16801
PHONE: (814) 238-6775

ELECTRIC
WEST PENN POWER COMPANY
2800 EAST COLLEGE AVENUE
STATE COLLEGE, PA 16801
PHONE: (814) 237-5721

TELEPHONE
VERIZON
224 SOUTH ALLEN STREET
STATE COLLEGE, PA 16801
PHONE: (814) 231-6511

CABLE TELEVISION
COMCAST
60 DECIBEL ROAD
STATE COLLEGE, PA 16801
PHONE: (800) 992-3515

STORMWATER
PATTON TOWNSHIP
100 PATTON PLAZA
STATE COLLEGE, PA 16803
PHONE: (814) 234-0271

PENNSYLVANIA ONE CALL SYSTEM INC. 1-800-242-1776 STOP! CALL BEFORE YOU DIG!

BEFORE YOU DIG ANYWHERE IN PENNSYLVANIA | CALL 1-800-242-1776
NON-MEMBERS MUST BE CONTACTED DIRECTLY

P:\ldd\proj\2019\19286\19286.01 - Phase 1\Design\plot files\final plans\19286.01-LD-COVER.dwg, 11/5/2021 11:12:50 AM, 1:1

TABLE OF CONTENTS

SHEET	DESCRIPTION
1	COVER PAGE
2	TABLE OF CONTENTS
3	EXISTING CONDITIONS PLAN
4	RECORD PLAN
5	SIGNATURE & NOTES PAGE
6	GEOMETRY PLAN – EAST
7	GEOMETRY PLAN – WEST
8	GRADING PLAN – EAST
9	GRADING PLAN – WEST
10	GRADING PLAN – BUILDING ENTRANCE & BASIN 4 ENLARGEMENT
11	GRADING PLAN – FIRST FLOOR ENTRANCE & ADA PARKING ENLARGEMENT
12	UTILITY PLAN – EAST
13	UTILITY PLAN – WEST
14	WATER MAIN EXTENSION PLAN
15	GAS LINE EXTENSION PLAN
16	LANDSCAPING PLAN – EAST
17	LANDSCAPING PLAN – WEST
18	LIGHTING PLAN
19	PLAN & PROFILE – MASTERS BOULEVARD
20	PLAN & PROFILE – MASTERS BOULEVARD
21	PLAN & PROFILE – ROYAL QUEENS MAIN
22	GENERAL CONSTRUCTION DETAILS
23	LANDSCAPE AND LIGHTING DETAILS
24	UTILITY DETAILS
25	UTILITY DETAILS
26	ROAD CROSS SECTIONS
PC1	POST CONSTRUCTION STORMWATER MANAGEMENT PLAN – OVERALL PLAN
PC2	POST CONSTRUCTION STORMWATER MANAGEMENT PLAN – PANEL 1
PC3	POST CONSTRUCTION STORMWATER MANAGEMENT PLAN – PANEL 2
PC4	POST CONSTRUCTION STORMWATER MANAGEMENT PLAN – PANEL 3
PC5	POST CONSTRUCTION STORMWATER MANAGEMENT PLAN – PANEL 4
PC6	POST CONSTRUCTION STORMWATER MANAGEMENT DETAILS
PC7	POST CONSTRUCTION STORMWATER MANAGEMENT DETAILS
PC8	POST CONSTRUCTION STORMWATER MANAGEMENT DETAILS
PC9	POST CONSTRUCTION STORMWATER MANAGEMENT DETAILS
ES1	EROSION AND SEDIMENTATION CONTROL PLAN – STAGE A – PANEL 1
ES2	EROSION AND SEDIMENTATION CONTROL PLAN – STAGE A – PANEL 2
ES3	EROSION AND SEDIMENTATION CONTROL PLAN – STAGE B – PANEL 1
ES4	EROSION AND SEDIMENTATION CONTROL PLAN – STAGE B – PANEL 2
ES5	EROSION AND SEDIMENTATION CONTROL PLAN – STAGE B – PANEL 3
ES6	EROSION AND SEDIMENTATION CONTROL PLAN – STAGE B – PANEL 4
ES7	EROSION & SEDIMENTATION CONTROL PLAN – GAS LINE EXTENSION
ES8	EROSION AND SEDIMENTATION CONTROL DETAILS
ES9	EROSION AND SEDIMENTATION CONTROL DETAILS
ES10	EROSION AND SEDIMENTATION CONTROL DETAILS

*INDICATES PLAN SHEETS TO BE RECORDED AS A PART OF THE "STORMWATER MANAGEMENT SITE PLAN"

PennTerra ENGINEERING INC.

CENTRAL PENNSYLVANIA REGION OFFICE:
3075 ENTERPRISE DRIVE
SUITE 100
STATE COLLEGE, PA 16801
PH: 814-231-8285
Fax: 814-237-2308

LANCASTER REGION OFFICE:
3904 B ABEL DRIVE
COLUMBIA, PA 17512
PH: 717-522-5031
Fax: 717-522-5046

WWW.PENNTERRA.COM

COPYRIGHT 2021 BY THE ENGINEER
THE INFORMATION CONTAINED HEREON MAY NOT BE USED OR COPIED IN ANY MANNER WITHOUT THE WRITTEN PERMISSION OF THE ENGINEER EXCEPT AS OTHERWISE PROVIDED BY APPROPRIATE LAWS OR STATUTES.
© PENNTERRA ENGINEERING 2021 ALL RIGHTS RESERVED

COMMONWEALTH OF PENNSYLVANIA
REGISTERED PROFESSIONAL
C. ANTHONY FRUCHTL
ENGINEER
PE-062413
Seal

Designer EAH
Draftsman EAH
Proj.Manager CAF
Surveyor BRK
Perimeter Ck.
Book 463 Pg 1
File 19286.01-LD-TOC
Layout TOC

Date Description
REVISIONS

TOFTREES PLANNED COMMUNITY WEST MOUNT NITTANY HEALTH OUTPATIENT CENTER

PATTON TOWNSHIP
CENTRE COUNTY
PENNSYLVANIA

FINAL LAND DEVELOPMENT PLAN

TABLE OF CONTENTS

PROJECT NO.
19286.01
DATE
NOVEMBER 5, 2021
SCALE
N.T.S.
SHEET NO.
2

P:\ddpproj\2019\19286\19286.01 - Phase 1\Design\plot files\final plans\19286.01-LD-TOC.dwg, 11/5/2021 11:12:54 AM, 1:1

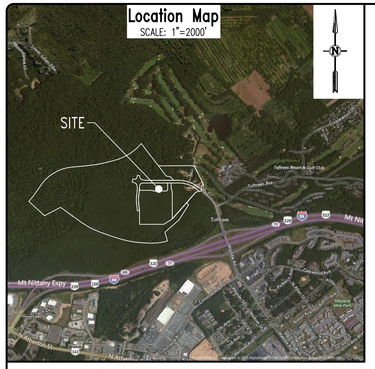

EXISTING LINE TABLE

LINE	DIRECTION	LENGTH
L1	S 78° 32' 41" W	65.52'
L2	N 50° 09' 12" W	81.34'
L3	S 50° 09' 12" E	97.11'
L4	S 0° 00' 00" E	123.81'
L5	S 8° 00' 07" E	19.18'

EXISTING CURVE TABLE

CURVE	LENGTH	RADIUS	TANGENT	CHORD DIRECTION	CHORD	DELTA
C1	603.31'	867.50'	314.43'	S 70° 04' 36" E	591.22'	39° 50' 48"
C2	2.41'	210.00'	1.21'	S 1° 38' 45" E	2.41'	0° 39' 33"
C3	34.75'	210.00'	17.41'	S 6° 43' 00" E	34.71'	9° 28' 57"
C4	551.15'	792.50'	287.25'	N 70° 04' 36" W	540.11'	39° 50' 48"
C5	79.45'	190.00'	40.31'	S 78° 01' 16" W	78.87'	23° 57' 27"
C6	45.64'	55.00'	24.23'	S 42° 16' 06" W	44.34'	47° 32' 54"
C7	61.33'	190.00'	30.93'	S 9° 14' 49" W	61.06'	18° 29' 39"
C8	217.63'	990.00'	109.25'	S 6° 17' 51" W	217.19'	12° 35' 43"
C9	184.66'	420.00'	93.84'	S 0° 00' 00" E	183.17'	25° 11' 25"
C10	212.29'	990.00'	106.55'	S 6° 27' 08" E	211.88'	12° 17' 10"
C11	199.42'	930.00'	100.09'	N 6° 27' 08" W	199.04'	12° 17' 10"
C12	211.03'	480.00'	107.25'	N 0° 00' 00" E	209.34'	25° 11' 25"

EXISTING CURVE TABLE

CURVE	LENGTH	RADIUS	TANGENT	CHORD DIRECTION	CHORD	DELTA
C13	204.44'	930.00'	102.63'	N 6° 17' 51" E	204.03'	12° 35' 43"
C14	80.63'	190.00'	40.93'	N 12° 09' 24" W	80.02'	24° 18' 48"
C15	37.16'	55.00'	19.32'	N 43° 40' 08" W	36.46'	38° 42' 41"
C16	62.74'	250.00'	31.54'	N 70° 12' 52" W	62.58'	14° 22' 47"
C17	2.81'	1287.50'	1.41'	N 77° 20' 31" W	2.81'	0° 07' 31"
C18	76.98'	200.00'	38.97'	S 88° 18' 23" E	76.51'	22° 03' 16"
C19	46.94'	50.00'	25.36'	N 53° 46' 14" E	45.24'	53° 47' 29"
C20	86.78'	185.00'	44.20'	N 13° 26' 15" E	85.98'	26° 52' 30"
C21	96.99'	185.00'	49.64'	S 14° 35' 32" E	95.38'	30° 02' 13"
C22	25.29'	50.00'	12.92'	S 44° 06' 01" E	25.03'	28° 59' 06"
C23	101.41'	185.00'	52.01'	S 74° 17' 47" E	100.15'	31° 24' 26"
C24	193.29'	990.00'	96.96'	N 7° 00' 06" E	192.99'	11° 11' 13"

EXISTING CURVE TABLE

CURVE	LENGTH	RADIUS	TANGENT	CHORD DIRECTION	CHORD	DELTA
C25	217.63'	990.00'	109.25'	N 6° 17' 51" W	217.19'	12° 35' 43"
C26	5.34'	990.00'	2.67'	N 0° 09' 17" W	5.34'	0° 18' 33"
C27	50.51'	90.00'	25.94'	S 16° 04' 44" E	49.85'	32° 09' 28"
C28	40.89'	97.00'	20.76'	S 20° 04' 48" E	40.59'	24° 09' 21"
C29	13.55'	97.00'	6.78'	S 4° 00' 04" E	13.54'	8° 00' 07"
C30	10.86'	24.17'	5.52'	S 12° 52' 27" E	10.77'	25° 44' 55"
C31	45.82'	29.17'	29.17'	S 45° 00' 00" W	41.25'	90° 00' 00"
C32	21.18'	24.17'	11.32'	N 64° 53' 45" W	20.51'	50° 12' 29"
C33	22.63'	25.83'	12.10'	N 64° 53' 45" W	21.92'	50° 12' 29"
C34	40.89'	44.17'	22.04'	N 63° 28' 39" W	39.45'	53° 02' 42"
C35	24.33'	990.00'	12.17'	N 0° 42' 15" E	24.33'	1° 24' 30"
C36	225.72'	1800.00'	113.01'	N 38° 41' 30" E	225.57'	7° 11' 05"

EXISTING CURVE TABLE

CURVE	LENGTH	RADIUS	TANGENT	CHORD DIRECTION	CHORD	DELTA
C37	1047.58'	1200.00'	559.80'	S 60° 06' 30" W	1014.63'	50° 01' 05"
C38	937.10'	3800.00'	470.94'	N 78° 03' 10" E	934.73'	14° 07' 46"
C39	762.03'	1400.00'	390.71'	N 55° 23' 41" E	752.66'	31° 11' 11"
C40	37.16'	209.94'	18.63'	S 6° 23' 13" E	37.11'	10° 08' 30"
C41	433.53'	1500.00'	218.29'	S 82° 28' 17" W	432.02'	16° 33' 34"
C42	895.95'	2750.00'	451.98'	N 79° 54' 59" W	891.99'	18° 40' 01"
C43	500.21'	1750.00'	251.82'	N 62° 23' 39" W	498.51'	16° 22' 38"

PROPERTY ADJOINERS

A	TP#18-023-001	RB 1662-PG 0191	Sieg, Philip H. ETAL
B	TP#18-023-003A	RB 2109-PG 0286	Sherwood LP
C	TP#18-023-005	RB 2045-PG 0864	Charlestown Partners
D	TP#18-022-004	RB 1662-PG 0229	Sieg, Philip H. ETAL
E	TP#18-004-001	RB 2062-PG 0255	State College Friends LP
F	TP#18-022-001	RB 1662-PG 0191	Sieg, Philip H. ETAL
G	TP#18-022-006A	RB 2045-PG 0864	Charlestown Partners
H	TP#18-022-002	RB 1662-PG 0191	Sieg, Philip H.
I	TP#18-022-006	RB 2109-PG 0286	Sherwood LP

SURVEY FEATURES LEGEND

- Property Line, Lot Line or Right of Way Line
- Adjoining Property Line
- Easement Line
- Zoning Boundary
- Property Corner Found
- Property Corner To Be Set
- Project Benchmark

EXISTING FEATURES LEGEND

- Existing Building
- Existing Curbing & Edge of Pavement
- Existing Concrete Areas
- Existing Gravel Areas
- Existing Fence / Type
- Existing Contours w/ Elevation (1's & 2's)
- Existing Contours w/ Elevation (5's & 10's)
- Existing Sanitary Sewer w/ Manhole
- Existing Sanitary Sewer Lateral w/ Clean Out
- Existing Water Line w/ Valve
- Existing Water Service Lateral
- Existing Storm Sewer Line w/ Inlet
- Existing Gas Line
- Existing Underground Electric
- Existing Overhead Utility Line w/ Pole
- Existing Fire Hydrant
- Existing Manhole
- Existing Utility Pole
- Existing Guy Wire
- Existing Storm Sewer Inlet Type-M
- Existing Storm Sewer Inlet Type-C
- Existing Light Pole/Standard
- Existing Sign
- Existing Soil Limit Line / Boundary
- Existing Soil Type
- Existing Tree Row
- Existing Stream
- Existing Floodplain
- Delineated Wetlands Line
- 25% Slopes Or Greater
- Existing Deciduous Tree
- Existing Evergreen Tree

SOILS LEGEND

Soil cover on the site consists of:

- LvB – Leetonia sand, variant 3%–8% Slopes
- MrB – Morrison sandy loam, 2%–8% Slopes
- MrC – Morrison sandy loam, 8%–15% Slopes
- MrD – Morrison sandy loam, 15%–25% Slopes
- MtF – Morrison very stony loam, steep
- WyA – Wyoming gravelly sand loam, rarely flooded, 0 to 5 percent slopes

GRAPHIC SCALE

200 0 100 200 400 800

(IN FEET)
1 inch = 200 ft.

PennTerra ENGINEERING INC.

CENTRAL PENNSYLVANIA REGION OFFICE:
3075 ENTERPRISE DRIVE
SUITE 100
STATE COLLEGE, PA 16801
PH: 814-231-8285
Fax: 814-237-2308

LANCASTER REGION OFFICE:
3904 B ABEL DRIVE
COLUMBIA, PA 17512
PH: 717-522-5031
Fax: 717-522-5046

WWW.PENNTERRA.COM

COPYRIGHT 2021 BY THE ENGINEER
THE INFORMATION CONTAINED HEREON MAY NOT BE USED OR COPIED IN ANY MANNER WITHOUT THE WRITTEN PERMISSION OF THE ENGINEER EXCEPT AS OTHERWISE PROVIDED BY APPROPRIATE LAWS OR STATUTES.
© PENNTERRA ENGINEERING 2021 ALL RIGHTS RESERVED

COMMONWEALTH OF PENNSYLVANIA — REGISTERED PROFESSIONAL — C. ANTHONY FRUCHTL — ENGINEER PE-062413 — Seal

COMMONWEALTH OF PENNSYLVANIA — REGISTERED PROFESSIONAL — NEVIN L. GROVE — LAND SURVEYOR No. SU061171 — Seal

Designer	EAH
Draftsman	EAH
Proj.Manager	CAF
Surveyor	BRK
Perimeter Ck.	
Book	463 Pg 1
File	19286.01-LD-EX-DEMO
Layout	EX

Date	Description
	REVISIONS

TOFTREES PLANNED COMMUNITY WEST MOUNT NITTANY HEALTH OUTPATIENT CENTER

PATTON TOWNSHIP
CENTRE COUNTY
PENNSYLVANIA

FINAL LAND DEVELOPMENT PLAN

EXISTING CONDITIONS PLAN

PROJECT NO.	19286.01
DATE	NOVEMBER 5, 2021
SCALE	1"=200'
SHEET NO.	3

P:\lddproj\2019\19286\19286.01 - Phase 1\Design\plot files\final plans\19286.01-LD-EX-DEMO.dwg, 11/5/2021 11:18:29 AM, 1:1

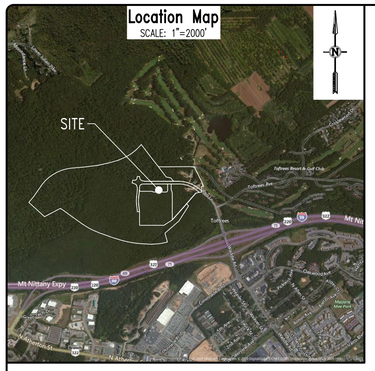

SURVEY FEATURES LEGEND

- Property Line, Lot Line or Right of Way Line
- Adjoining Property Line
- Easement Line
- Zoning Boundary
- Property Corner Found
- Property Corner To Be Set
- Project Benchmark

SOILS LEGEND

Soil cover on the site consists of:

LvB – Leetonia sand, variant 3%–8% Slopes
MrB – Morrison sandy loam, 2%–8% Slopes
MrC – Morrison sandy loam, 8%–15% Slopes
MrD – Morrison sandy loam, 15%–25% Slopes
MTF – Morrison very stony loam, steep
WyA – Wyoming gravelly sand loam, rarely flooded, 0 to 5 percent slopes

EXISTING FEATURES LEGEND

- Existing Building
- Existing Curbing & Edge of Pavement
- Existing Concrete Areas
- Existing Gravel Areas
- Existing Fence / Type
- Existing Light Pole/Standard
- Existing Sign
- Existing Soil Limit Line / Boundary
- Existing Soil Type (HaB)
- Existing Tree Row
- Existing Stream
- Existing Floodplain
- Delineated Wetlands Line
- Existing Deciduous Tree
- Existing Evergreen Tree

PROPOSED FEATURES LEGEND

- PROPOSED BUILDING
- PROPOSED CURBING & EDGE OF PAVEMENT
- PROPOSED CONCRETE SIDEWALK
- PROPOSED CONCRETE AREAS
- PROPOSED BITUMINOUS PAVEMENT AREAS
- PROPOSED GRAVEL AREAS
- PROPOSED RETAINING WALL
- PROPOSED TREE ROW
- PROPOSED STORMWATER BASIN/ BEST MANAGEMENT PRACTICE (BMP) FACILITIES
- PROPOSED PAINTED HANDICAPPED PARKING SYMBOLS
- PROPOSED SIGN
- PROPOSED DEPRESSED CURB W/ CURB TRANSITION

PROPERTY ADJOINERS

A	TP#18-023-001	RB 1662-PG 0191 — Sieg, Philip H. ETAL
B	TP#18-023-003A	RB 2109-PG 0286 — Sherwood LP
C	TP#18-023-005	RB 2045-PG 0864 — Charlestown Partners
D	TP#18-022-004	RB 1662-PG 0229 — Sieg, Philip H. ETAL
E	TP#18-004-001	RB 2062-PG 0255 — State College Friends LP
F	TP#18-022-001	RB 1662-PG 0191 — Sieg, Philip H. ETAL
G	TP#18-022-006A	RB 2045-PG 0864 — Charlestown Partners
H	TP#18-022-002	RB 1662-PG 0191 — Sieg, Philip H.
I	TP#18-022-006	RB 2109-PG 0286 — Sherwood LP

GRAPHIC SCALE

200 0 100 200 400 800

(IN FEET)
1 inch = 200 ft.

PennTerra ENGINEERING INC.

CENTRAL PENNSYLVANIA REGION OFFICE:
3075 ENTERPRISE DRIVE
SUITE 100
STATE COLLEGE, PA 16801
PH: 814-231-8285
Fax: 814-237-2308

LANCASTER REGION OFFICE:
3904 B ABEL DRIVE
COLUMBIA, PA 17512
PH: 717-522-5031
Fax: 717-522-5046

WWW.PENNTERRA.COM

COPYRIGHT 2021 BY THE ENGINEER
THE INFORMATION CONTAINED HEREON MAY NOT BE USED OR COPIED IN ANY MANNER WITHOUT THE WRITTEN PERMISSION OF THE ENGINEER EXCEPT AS OTHERWISE PROVIDED BY APPROPRIATE LAWS OR STATUTES.
© PENNTERRA ENGINEERING 2021 ALL RIGHTS RESERVED

COMMONWEALTH OF PENNSYLVANIA — REGISTERED PROFESSIONAL — C. ANTHONY FRUCHTL — ENGINEER PE-062413 — Seal

COMMONWEALTH OF PENNSYLVANIA — REGISTERED PROFESSIONAL — NEVIN L. GROVE — LAND SURVEYOR No. SU061171 — Seal

Designer	EAH
Draftsman	EAH
Proj.Manager	CAF
Surveyor	BRK
Perimeter Ck.	
Book	463 Pg 1
File	19286.01-LD-RP
Layout	RP

Date	Description
	REVISIONS

TOFTREES PLANNED COMMUNITY WEST MOUNT NITTANY HEALTH OUTPATIENT CENTER

PATTON TOWNSHIP
CENTRE COUNTY
PENNSYLVANIA

FINAL LAND DEVELOPMENT PLAN

RECORD PLAN

PROJECT NO.
19286.01

DATE
NOVEMBER 5, 2021

SCALE
1"=200'

SHEET NO.
4

P:\ldotproj\2019\19286\19286.01 - Phase 1\Design\plot files\final plans\19286.01-LD-RP.dwg, 11/5/2021 11:19:35 AM, 1:1

Location Map
SCALE: 1"=2000'

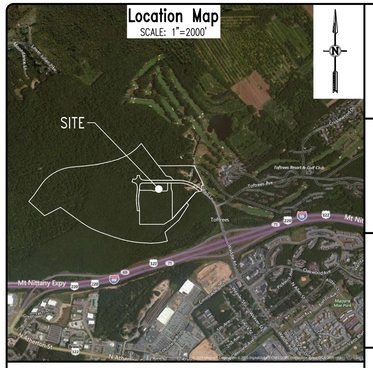

Owners Certification for Tax Parcel 18-022-003

Commonwealth of Pennsylvania
County of Centre

On this the _____day of _____, 20_____,

_____
the undersigned owners personally appeared before me and certified that they were the owners of the properties shown on this plan and acknowledge the same to be their act and plan and designs, the same to be recorded as such,according to the law.

_____ Owner

witness my hand and seal, this date _____

_____
Notary Public Commission Expires

Owners Certification for Tax Parcel 18-004-001A

Commonwealth of Pennsylvania
County of Centre

On this the _____day of _____, 20_____,

_____
the undersigned owners personally appeared before me and certified that they were the owners of the properties shown on this plan and acknowledge the same to be their act and plan and designs, the same to be recorded as such,according to the law.

_____ Owner

witness my hand and seal, this date _____

_____
Notary Public Commission Expires

Owners Certification for Tax Parcel 18-004-002

Commonwealth of Pennsylvania
County of Centre

On this the _____day of _____, 20_____,

_____
the undersigned owners personally appeared before me and certified that they were the owners of the properties shown on this plan and acknowledge the same to be their act and plan and designs, the same to be recorded as such,according to the law.

_____ Owner

witness my hand and seal, this date _____

_____
Notary Public Commission Expires

Storm Water Facilities Acknowledgement

I, _____ the landowner, acknowledge the Stormwater Management System is to be maintained in accordance with the approved Ownership and Maintenance Program and shall remain a permanent fixture which can be altered only after approval of a revised plan by the Township of Patton.

Recorder of Deeds

Recorder's Stamp Here

Fire Chief Certification

I have reviewed and hereby certify that the location of Fire Lanes and Fire Hydrants shown on this plan are adequate.

_____
Fire Chief Date

Design Engineer Stormwater Certification

I, _____, hereby certify that the Stormwater Management Plan meets all design standards and criteria of the Patton Township Stormwater Management Regulations, Chapter 147 of the Patton Township Code of Ordinances.

Professional Land Surveyor Certification

I, Nevin L. Grove, a Professional Land Surveyor in the Commonwealth of Pennsylvania, do hereby certify that this plan correctly represents the tracts of lands as shown.

_____
Signature Date

Township Supervisors

Patton Township Supervisors Approved

_____
Chairman Date

_____
Secretary Date

Township Planning Commission

Patton Township Planning Commission Approved

_____
Chairman Date

_____
Secretary Date

Owners Certification for Tax Parcel 18-___-____ (LOT 1)

Commonwealth of Pennsylvania
County of Centre

On this the _____day of _____, 20_____,

_____
the undersigned owners personally appeared before me and certified that they were the owners of the properties shown on this plan and acknowledge the same to be their act and plan and designs, the same to be recorded as such,according to the law.

_____ Owner

witness my hand and seal, this date _____

_____
Notary Public Commission Expires

Owners Certification for Tax Parcel 18-___-____ (LOT 2)

Commonwealth of Pennsylvania
County of Centre

On this the _____day of _____, 20_____,

_____
the undersigned owners personally appeared before me and certified that they were the owners of the properties shown on this plan and acknowledge the same to be their act and plan and designs, the same to be recorded as such,according to the law.

_____ Owner

witness my hand and seal, this date _____

_____
Notary Public Commission Expires

Owners Certification for Tax Parcel 18-___-____ (LOT 3)

Commonwealth of Pennsylvania
County of Centre

On this the _____day of _____, 20_____,

_____
the undersigned owners personally appeared before me and certified that they were the owners of the properties shown on this plan and acknowledge the same to be their act and plan and designs, the same to be recorded as such,according to the law.

_____ Owner

witness my hand and seal, this date _____

_____
Notary Public Commission Expires

PROJECT NOTES:

1. General Site Information
   a. Owners of Record: Philip H. Sieg, ETAL, 2121 Old Gatesburg Road, State College PA 16803 — Charlestown Partners, 2121 Old Gatesburg Road, State College, PA 16803
   b. Co-Developers: Mount Nittany Health (Medical Office Building), 1800 East Park Avenue, State College, PA 16803 — Toftrees Development Company Inc. (Infrastructure), 2121 Old Gatesburg Road, State College, PA 16803
   c. Site Location: XXX Toftrees Avenue, State College PA 16803
   d. Zoning District: Planned Community (PC) District (Toftrees Planned Community)
   e. Deed Information:
      Lot 1: RB XXXX, PG XX
      Lot 2: RB XXXX, PG XX
      Lot 3: RB XXXX, PG XX
      T.P. 18-022-003: RB XXXX, PG XX
      T.P. 18-004-001A: RB XXXX, PG XX
      T.P. 18-004-002: RB XXXX, PG XX
   f. Parcel Size:
      Lot 1: 3.824 Acres (166,568 SF)
      Lot 2: 20.000 Acres (871,178 SF)
      Lot 3: 9.243 Acres (402,634 SF)
      Rood ROW: 4.931 Acres (214,798 SF)
      T.P. 18-022-003: 132.018 Acres (5,750,704 SF)
      T.P. 18-004-001A: 9.912 Acres (431,767 SF)
      T.P. 18-004-002: 4.753 Acres (207,046 SF)
   g. Building Setbacks: Front: 20'; Rear: 50'; Side: 10'
   h. Land Use: Existing: Wooded Forest; Proposed: Medical Office Building, Public Roads
   i. Building Height: Maximum Allowed: 60'; Proposed: XX'
   j. Impervious Coverage: Maximum Allowed: 100% x 20.00 Acres = 20.00 Acres (817,200 SF)
      Existing: 0.00 Acres; Proposed: 7.67 Acres (334,041 SF) – 38.34%
   k. Proposed Building Size: 37,722 SF Footprint, 150,888 SF Gross Floor Area
2. Parking Calculations
   a. Required Parking Stalls: 150,888 SF Building x 1 Space / 200 SF = 754 Spaces Required.
   b. Proposed Parking Stalls: 614 Spaces + 15 ADA Spaces = 629 Spaces Total.
      A waiver has been requested for a reduction in number of required parking stalls.
3. Act 287 Utility Information: Serial No. **20200241040**
   All utility locations should be verified prior to any construction, utility information and locations should be considered approximate. Contractor shall notify PA One Call prior to any excavation.
   a. Electric: West Penn Power Company, 2800 E. College Ave., State College, PA 16801 – Phone: (800) 686-0021
   b. Telephone: Verizon, Facility Management Center, 224 S. Allen Street, State College, PA 16801 – Phone: (814) 231-6511
   c. TV Cable: Comcast, 60 Decibel Road, State College, PA 16801 – Phone: (888) 266-2278
   d. Gas: Columbia Gas of Pennsylvania, 2550 Carolean Drive, State College, PA 16801 – Phone: (814) 238-6775
   e. Sanitary Sewer Treatment: University Area Joint Authority (UAJA), 1576 Spring Valley Road, State College, PA 16801Phone: (814) 238-5361
   f. Water: State College Borough Water Authority (SCBWA), 1201 West Branch Road, State College, PA 16801 – Phone: (814) 238-6766
   g. Stormwater: Patton Township, 100 Patton Plaza, State College, PA 16803 – Phone: (814) 234-0271
4. Natural Site Features & Survey Information
   a. Soil limits and descriptions have been taken from the Natural Resources Conservation Web Soil Survey Dated March 2020 as shown on the Existing Conditions Plan.
   b. There are wetlands on the property, and are shown on the Existing Conditions Plan. The wetlands have been identified by Vortex Environmental, Inc. through a field investigation on November 18 and 21, 2019.
   c. There is a portion of this property within a Zone 'A' 100-year floodplain according to the Federal Emergency Management Agency (FEMA) Map Number 42027C0610F for Patton Township, effective May 4, 2009.
   d. There are steep slopes (>25%) located on this property as shown on the Existing Conditions Plan.
   e. Contours are shown at 1' intervals, and were generated from a topographic field survey by PennTerra Engineering Inc.
   f. Horizontal Datum is Pennsylvania North Zone State Plane Coordinates, North American Datum of 1983 (PA NAD83) U.S. Feet.
   g. Elevation Datum is the National Geodetic Vertical Datum of 1929 (NVGD 29)
   h. The Project Benchmark is the top of casting of Sanitary Sewer Manhole 100-27, located at the southeastern corner of the Toftrees Ave – Waddle Road intersection. Elevation = 1157.16.
5. Project References
   a. "Toftrees Master Plan", prepared by Miller, Detuerk & Associates, approved May 27, 1987
   b. "Land Disposition and Subdivision Map of a Portion of Lands of Federated Home and Mortgage Co., Inc." by Sweetland Engineering & Associates, Inc., dated March 25, 1985 and recorded at Centre County Recorder of Deeds Office in Plat Book 34, Page 116.
   c. "Toftrees Planned Community Master Plan Updates", by PennTerra Engineering, Inc., last revised April 21, 2017 and recorded at Centre County Recorder of Deeds Office in Plat Book 92, Page 133.
   d. "Toftrees Planned Community West, Subdivision of Tax Parcel 18-022-003 & Tax Parcel 18-004-001A" by PennTerra Engineering, Inc., last revised _____ and recorded at Centre County Recorder of Deeds Office in Plat Book _____, Page _____.
6. Additional Information
   a. Water supply to the site will be provided by State College Borough Water Authority (SCBWA). Water mains through the site will be owned and maintained by the Authority.
   b. Sanitary sewer service to the site will be provided by University Area Joint Authority (UAJA). Sewer mains through the site will be owned and maintained by the Sewer Authority.
   c. All proposed on-site utilities will be underground.
   d. A fire suppression system will be provided in the proposed building.
   e. All parking stalls, loading spaces, and parking lot surfaces shall be constructed using all weather materials, such as concrete pavement and bituminous asphalt pavement.
   f. An Erosion and Sedimentation Pollution Control Plan has been submitted to Centre County Conservation District for approval.
   g. The building address is_____.
7. The purpose of this plan is to develop Tax Parcel 18-22-03A with a medical office building and related infrastructure, and to develop public roads that serve the project site.
8. The Waddle Road Contribution Fee in the amount of $2,857.74/1,000 SF until November 30, 2021 shall be due prior to the issuance of a Zoning Permit in accordance with the Toftrees Master Plan. The fee will escalate by 3.13% each year on November 30, each year thereafter.
9. There is a 10' Utility Easement along the street frontage of all lots.
10. Property Monuments and Pins shall be set after lot development and landscaping is completed.
11. All open space areas, drainage easements, detention basins, and all drainage structures located outside of the street R-O-W shall be maintained by the respective Owners or Owner's Association.
12. The Stormwater Management Operations and Maintenance Plan is included as part of the Post Construction Stormwater Management Plan in accordance with Patton Township Stormwater Management Ordinance §147-28. This plan identifies party(ies) or entity(ies) responsible for the maintenance of the Stormwater Management and BMP facilities shown on this plan.
13. As-built drawings will be prepared in accordance with the Patton Township Stormwater Ordinance, Chapter 147, Section 147-24C.
14. Stree tree planting shall be in compliance with Section 153-36F of the Patton Township Subdivision and Land Development Ordinance, and shall be as follows:
   a. Waddle Road Extension – Red Maple (Acer Rubrum)
   b. Royal Queens Main – Red Oak (Quercus Lobatae)
15. The individual lot owners shall maintain the required vegetation specified landscape buffers as shown on this plan.

PennTerra ENGINEERING INC.

CENTRAL PENNSYLVANIA REGION OFFICE:
3075 ENTERPRISE DRIVE
SUITE 100
STATE COLLEGE, PA 16801
PH: 814-231-8285
Fax: 814-237-2308

LANCASTER REGION OFFICE:
3904 B ABEL DRIVE
COLUMBIA, PA 17512
PH: 717-522-5031
Fax: 717-522-5046

WWW.PENNTERRA.COM

COPYRIGHT 2021 BY THE ENGINEER
THE INFORMATION CONTAINED HEREON MAY NOT BE USED OR COPIED IN ANY MANNER WITHOUT THE WRITTEN PERMISSION OF THE ENGINEER EXCEPT AS OTHERWISE PROVIDED BY APPROPRIATE LAWS OR STATUTES.
© PENNTERRA ENGINEERING 2021 ALL RIGHTS RESERVED

COMMONWEALTH OF PENNSYLVANIA — REGISTERED PROFESSIONAL — C. ANTHONY FRUCHTL — ENGINEER PE-062413 — Seal

COMMONWEALTH OF PENNSYLVANIA — REGISTERED PROFESSIONAL — NEVIN L. GROVE — LAND SURVEYOR No. SU061171 — Seal

Designer EAH
Draftsman EAH
Proj.Manager CAF
Surveyor BRK
Perimeter Ck.
Book 463 Pg 1
File 19286.01-LD-SIG-NOTES
Layout SIG-NOTES

Date	Description
	REVISIONS

TOFTREES PLANNED COMMUNITY WEST MOUNT NITTANY HEALTH OUTPATIENT CENTER

PATTON TOWNSHIP
CENTRE COUNTY
PENNSYLVANIA

FINAL LAND DEVELOPMENT PLAN

SIGNATURE & NOTES PAGE

PROJECT NO. 19286.01
DATE NOVEMBER 5, 2021
SCALE N.T.S.
SHEET NO. 5

P:\ddproj\2019\19286\19286.01 - Phase 1\Design\plot files\final plans\19286.01-LD-SIG-NOTES.dwg, 11/5/2021 11:20:00 AM, 1:1


MASTERS BOULEVARD
46' PAVED CARTWAY
46'
R25'
R25'
R20'
24'
R830'
(4) 9"-15" CPP
Toftrees Avenue
60' R-O-W
5' CONCRETE SIDEWALK (TYP)
RELOCATED GOLF CART X-ING SIGN
RELOCATED LIGHT POLE
Project Benchmark:
Sanitary Sewer Manhole 100-27
TC=1157.16
12.09'
PVC
PVC
PVC

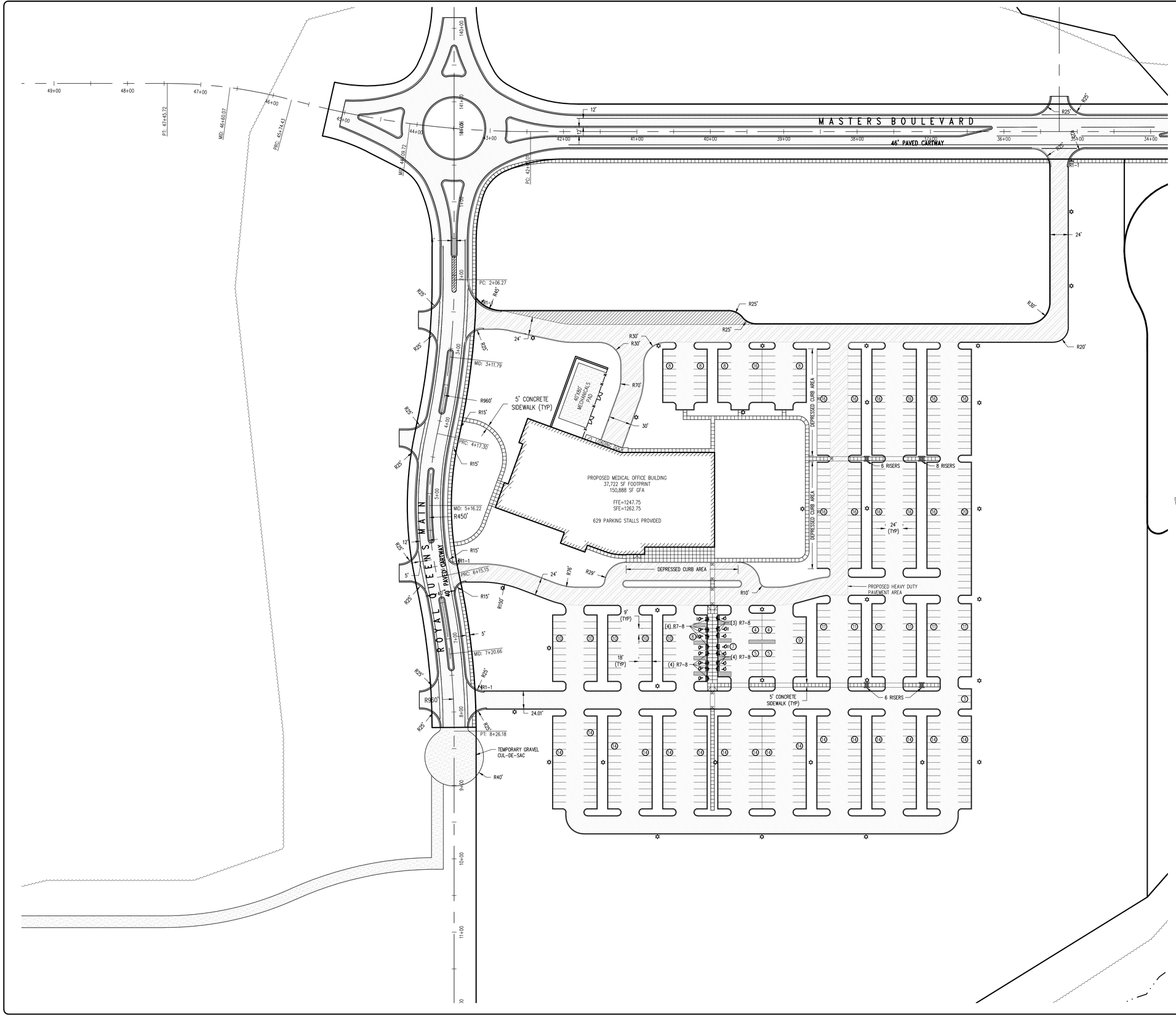

SURVEY FEATURES LEGEND

- Property Line, Lot Line or Right of Way Line
- Adjoining Property Line
- Project Benchmark

EXISTING FEATURES LEGEND

- Existing Building
- Existing Curbing & Edge of Pavement
- Existing Concrete Areas
- Existing Gravel Areas
- Existing Fence / Type
- Existing Sign
- Existing Tree Row
- Existing Deciduous Tree
- Existing Evergreen Tree

PROPOSED FEATURES LEGEND

- PROPOSED BUILDING
- PROPOSED CURBING & EDGE OF PAVEMENT
- PROPOSED CONCRETE SIDEWALK
- PROPOSED CONCRETE AREAS
- PROPOSED BITUMINOUS PAVEMENT AREAS
- PROPOSED HEAVY DUTY PAVEMENT AREAS
- PROPOSED GRAVEL AREAS
- PROPOSED RETAINING WALL
- PROPOSED TREE ROW
- PROPOSED STORMWATER BASIN/ BEST MANAGEMENT PRACTICE (BMP) FACILITIES
- PROPOSED PAINTED HANDICAPPED PARKING SYMBOLS
- (13) PROPOSED PARKING STALL COUNT
- S2 PROPOSED SIGN W/ LABEL
- PROPOSED DEPRESSED CURB W/ CURB TRANSITION
- PROPOSED LIGHT POLE

PennTerra ENGINEERING INC.

CENTRAL PENNSYLVANIA REGION OFFICE:
3075 ENTERPRISE DRIVE
SUITE 100
STATE COLLEGE, PA 16801
PH: 814-231-8285
Fax: 814-237-2308

LANCASTER REGION OFFICE:
3904 B ABEL DRIVE
COLUMBIA, PA 17512
PH: 717-522-5031
Fax: 717-522-5046

WWW.PENNTERRA.COM

COPYRIGHT 2021 BY THE ENGINEER
THE INFORMATION CONTAINED HEREON MAY NOT BE USED OR COPIED IN ANY MANNER WITHOUT THE WRITTEN PERMISSION OF THE ENGINEER EXCEPT AS OTHERWISE PROVIDED BY APPROPRIATE LAWS OR STATUTES.
© PENNTERRA ENGINEERING 2021 ALL RIGHTS RESERVED

COMMONWEALTH OF PENNSYLVANIA — REGISTERED PROFESSIONAL — C. ANTHONY FRUCHTL — ENGINEER PE-062413

Designer	EAH
Draftsman	EAH
Proj.Manager	CAF
Surveyor	BRK
Perimeter Ck.	
Book	463 Pg 1
File	19286.01-LD-GEO-WEST
Layout	GEO-WEST

Date	Description

REVISIONS

TOFTREES PLANNED COMMUNITY WEST MOUNT NITTANY HEALTH OUTPATIENT CENTER

PATTON TOWNSHIP
CENTRE COUNTY
PENNSYLVANIA

FINAL LAND DEVELOPMENT PLAN

GEOMETRY PLAN - WEST

PROJECT NO.
19286.01

DATE
NOVEMBER 5, 2021

SCALE
1"=60'

SHEET NO.
7

P:\ldd\proj\2019\19286\19286.01 - Phase 1\Design\dot files\final plans\19286.01-LD-GEO-WEST.dwg, 11/5/2021 11:20:58 AM, 1:1



SURVEY FEATURES LEGEND

- Property Line, Lot Line or Right of Way Line
- Adjoining Property Line
- Easement Line
- Project Benchmark

EXISTING FEATURES LEGEND

- EXISTING BUILDING — Existing Building
- Existing Curbing & Edge of Pavement
- Existing Concrete Areas
- Existing Gravel Areas
- Existing Fence / Type
- 1109 — Existing Contours w/ Elevation (1's & 2's)
- 1110 — Existing Contours w/ Elevation (5's & 10's)
- Existing Sanitary Sewer w/ Manhole
- Existing Sanitary Sewer Lateral w/ Clean Out
- Existing Water Line w/ Valve
- Existing Water Service Lateral
- Existing Storm Sewer Line w/ Inlet
- Existing Gas Line
- Existing Underground Electric
- Existing Overhead Utility Line w/ Pole
- Existing Fire Hydrant
- Existing Manhole
- Existing Utility Pole
- Existing Guy Wire
- Existing Storm Sewer Inlet Type-M
- Existing Storm Sewer Inlet Type-C
- Existing Light Pole/Standard
- Existing Sign
- Existing Tree Row
- Existing Stream
- Existing Floodplain
- Delineated Wetlands Line
- 25% Slopes Or Greater
- Existing Deciduous Tree
- Existing Evergreen Tree

PROPOSED FEATURES LEGEND

- PROPOSED BUILDING — PROPOSED BUILDING
- PROPOSED CURBING & EDGE OF PAVEMENT
- PROPOSED CONCRETE SIDEWALK
- PROPOSED CONCRETE AREAS
- PROPOSED BITUMINOUS PAVEMENT AREAS
- PROPOSED GRAVEL AREAS
- PROPOSED RETAINING WALL
- 1109 — PROPOSED MINOR CONTOURS W/ ELEVATION (1's & 2's)
- 1110 — PROPOSED MAJOR CONTOURS W/ ELEVATION (5's & 10's)
- 69.87 — PROPOSED SPOT ELEVATION
- 2.0% — PROPOSED GRADE SLOPE
- PROPOSED 8" SANITARY SEWER W/ MANHOLE
- PROPOSED 6" PVC SANITARY SEWER LATERAL W/ CLEAN OUT
- PROPOSED 8" WATER LINE W/ VALVE
- PROPOSED WATER SERVICE LATERAL W/ CURB BOX
- PROPOSED STORM SEWER W/ TYPE C INLET
- RD — PROPOSED STORM SEWER ROOF DRAIN
- G — PROPOSED GAS LINE
- ETC — PROPOSED COMBINED UTILITY CONDUIT
- PROPOSED FIRE HYDRANT
- PROPOSED STORM SEWER INLET – TYPE M
- PROPOSED STORM SEWER INLET – TYPE C
- PROPOSED CLEAN-OUT
- PROPOSED TREE ROW
- VAN — PROPOSED PAINTED HANDICAPPED PARKING SYMBOLS
- PROPOSED SIGN
- DEPRESSED CURB TRANSITION CURB — PROPOSED DEPRESSED CURB W/ CURB TRANSITION
- PROPOSED LIGHT POLE

GRAPHIC SCALE

60 0 30 60 120 240

(IN FEET)
1 inch = 60 ft.

PennTerra ENGINEERING INC.

CENTRAL PENNSYLVANIA REGION OFFICE:
3075 ENTERPRISE DRIVE
SUITE 100
STATE COLLEGE, PA 16801
PH: 814-231-8285
Fax: 814-237-2308

LANCASTER REGION OFFICE:
3904 B ABEL DRIVE
COLUMBIA, PA 17512
PH: 717-522-5031
Fax: 717-522-5046

WWW.PENNTERRA.COM

COPYRIGHT 2021 BY THE ENGINEER
THE INFORMATION CONTAINED HEREON MAY NOT BE USED OR COPIED IN ANY MANNER WITHOUT THE WRITTEN PERMISSION OF THE ENGINEER EXCEPT AS OTHERWISE PROVIDED BY APPROPRIATE LAWS OR STATUTES.
© PENNTERRA ENGINEERING 2021
ALL RIGHTS RESERVED

COMMONWEALTH OF PENNSYLVANIA
REGISTERED PROFESSIONAL
C. ANTHONY FRUCHTL
ENGINEER
PE-062413

Designer	EAH
Draftsman	EAH
Proj.Manager	CAF
Surveyor	BRK
Perimeter Ck.	
Book	463 Pg 1
File	19286.01-LD-GP-EAST
Layout	GP-EAST

Date	Description

REVISIONS

TOFTREES PLANNED COMMUNITY WEST MOUNT NITTANY HEALTH OUTPATIENT CENTER

PATTON TOWNSHIP
CENTRE COUNTY
PENNSYLVANIA

FINAL LAND DEVELOPMENT PLAN

GRADING PLAN – EAST

PROJECT NO.
19286.01

DATE
NOVEMBER 5, 2021

SCALE
1"=60'

SHEET NO.
8

P:\ddtproj\2019\19286\19286.01 - Phase 1\Design\plot files\final plans\19286.01-LD-GP-EAST.dwg, 11/5/2021 11:21:35 AM, 1:1

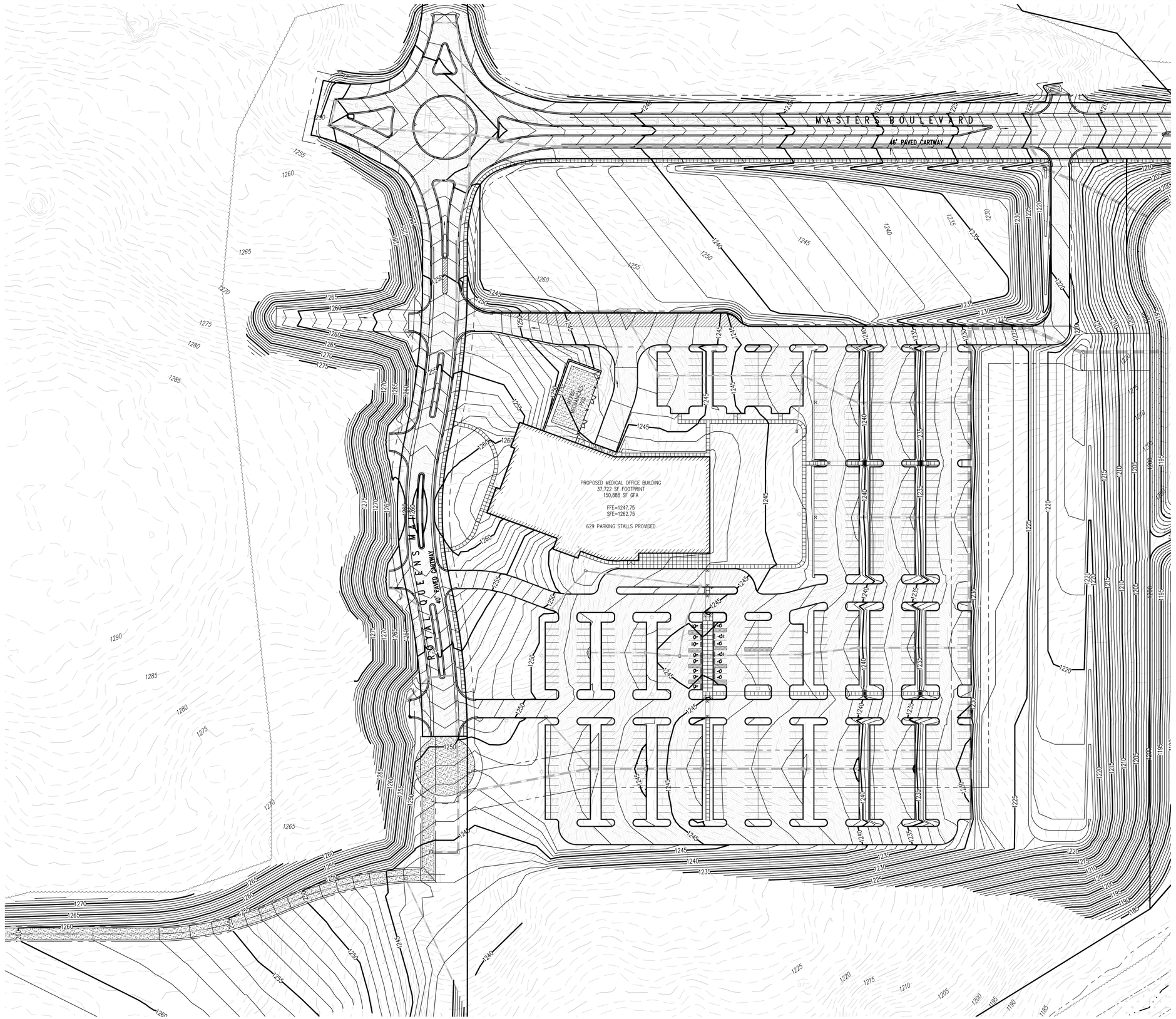

SURVEY FEATURES LEGEND

- Property Line, Lot Line or Right of Way Line
- Adjoining Property Line
- Easement Line
- Project Benchmark

EXISTING FEATURES LEGEND

- Existing Building
- Existing Curbing & Edge of Pavement
- Existing Concrete Areas
- Existing Gravel Areas
- Existing Fence / Type
- Existing Contours w/ Elevation (1's & 2's)
- Existing Contours w/ Elevation (5's & 10's)
- Existing Sanitary Sewer w/ Manhole
- Existing Sanitary Sewer Lateral w/ Clean Out
- Existing Water Line w/ Valve
- Existing Water Service Lateral
- Existing Storm Sewer Line w/ Inlet
- Existing Gas Line
- Existing Underground Electric
- Existing Overhead Utility Line w/ Pole
- Existing Fire Hydrant
- Existing Manhole
- Existing Utility Pole
- Existing Guy Wire
- Existing Storm Sewer Inlet Type-M
- Existing Storm Sewer Inlet Type-C
- Existing Light Pole/Standard
- Existing Sign
- Existing Tree Row
- Existing Stream
- Existing Floodplain
- Delineated Wetlands Line
- 25% Slopes Or Greater
- Existing Deciduous Tree
- Existing Evergreen Tree

PROPOSED FEATURES LEGEND

- PROPOSED BUILDING
- PROPOSED CURBING & EDGE OF PAVEMENT
- PROPOSED CONCRETE SIDEWALK
- PROPOSED CONCRETE AREAS
- PROPOSED BITUMINOUS PAVEMENT AREAS
- PROPOSED GRAVEL AREAS
- PROPOSED RETAINING WALL
- PROPOSED MINOR CONTOURS W/ ELEVATION (1's & 2's)
- PROPOSED MAJOR CONTOURS W/ ELEVATION (5's & 10's)
- PROPOSED SPOT ELEVATION
- PROPOSED GRADE SLOPE
- PROPOSED 8" SANITARY SEWER W/ MANHOLE
- PROPOSED 6" PVC SANITARY SEWER LATERAL W/ CLEAN OUT
- PROPOSED 8" WATER LINE W/ VALVE
- PROPOSED WATER SERVICE LATERAL W/ CURB BOX
- PROPOSED STORM SEWER W/ TYPE C INLET
- PROPOSED STORM SEWER ROOF DRAIN
- PROPOSED GAS LINE
- PROPOSED COMBINED UTILITY CONDUIT
- PROPOSED FIRE HYDRANT
- PROPOSED STORM SEWER INLET – TYPE M
- PROPOSED STORM SEWER INLET – TYPE C
- PROPOSED CLEAN-OUT
- PROPOSED TREE ROW
- PROPOSED PAINTED HANDICAPPED PARKING SYMBOLS
- PROPOSED SIGN
- PROPOSED DEPRESSED CURB W/ CURB TRANSITION
- PROPOSED LIGHT POLE

GRAPHIC SCALE

60 0 30 60 120 240

(IN FEET)
1 inch = 60 ft.

PennTerra ENGINEERING INC.

CENTRAL PENNSYLVANIA REGION OFFICE:
3075 ENTERPRISE DRIVE
SUITE 100
STATE COLLEGE, PA 16801
PH: 814-231-8285
Fax: 814-237-2308

LANCASTER REGION OFFICE:
3904 B ABEL DRIVE
COLUMBIA, PA 17512
PH: 717-522-5031
Fax: 717-522-5046

WWW.PENNTERRA.COM

COPYRIGHT 2021 BY THE ENGINEER
THE INFORMATION CONTAINED HEREON MAY NOT BE USED OR COPIED IN ANY MANNER WITHOUT THE WRITTEN PERMISSION OF THE ENGINEER EXCEPT AS OTHERWISE PROVIDED BY APPROPRIATE LAWS OR STATUTES.
© PENNTERRA ENGINEERING 2021 ALL RIGHTS RESERVED

COMMONWEALTH OF PENNSYLVANIA
REGISTERED PROFESSIONAL
C. ANTHONY FRUCHTL
ENGINEER
PE-062413

Designer	EAH
Draftsman	EAH
Proj.Manager	CAF
Surveyor	BRK
Perimeter Ck.	
Book	463 Pg 1
File	19286.01-LD-GP-WEST
Layout	GP-WEST

Date	Description

REVISIONS

TOFTREES PLANNED COMMUNITY WEST MOUNT NITTANY HEALTH OUTPATIENT CENTER

PATTON TOWNSHIP
CENTRE COUNTY
PENNSYLVANIA

FINAL LAND DEVELOPMENT PLAN

GRADING PLAN - WEST

PROJECT NO.
19286.01

DATE
NOVEMBER 5, 2021

SCALE
1"=60'

SHEET NO.
9

P:\ltddtprojs\2019\19286\19286.01 - Phase 1\Design\plot files\final plans\19286.01-LD-GP-WEST.dwg, 11/5/2021 11:22:28 AM, 1:1

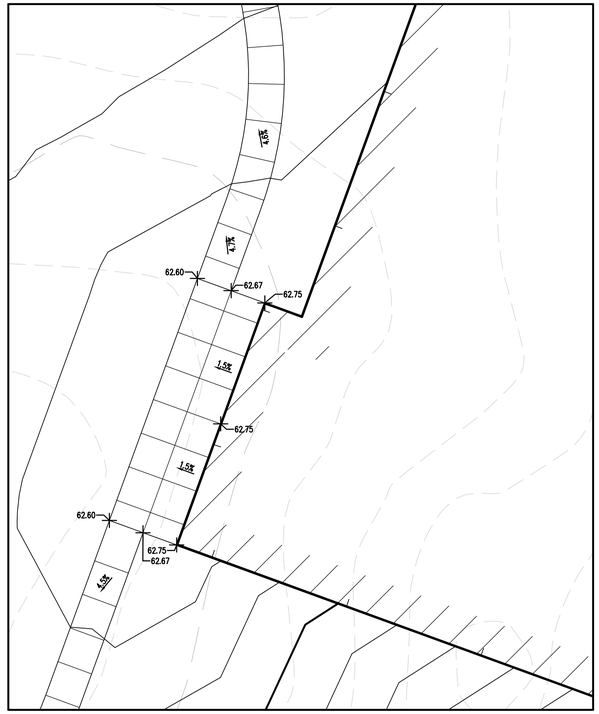

SECOND FLOOR ENTRANCE ENLARGEMENT

SCALE: 1"=10'

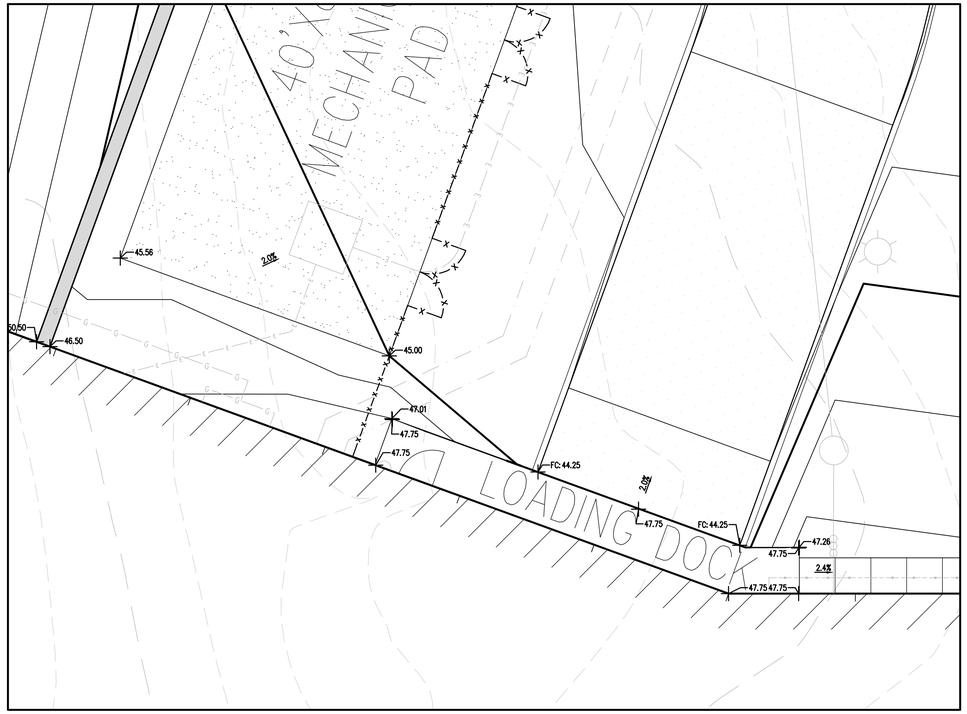

LOADING DOCK AREA ENLARGEMENT

SCALE: 1"=10'

GRAPHIC SCALE

10 0 5 10 20 40

(IN FEET)
1 inch = 10 ft.

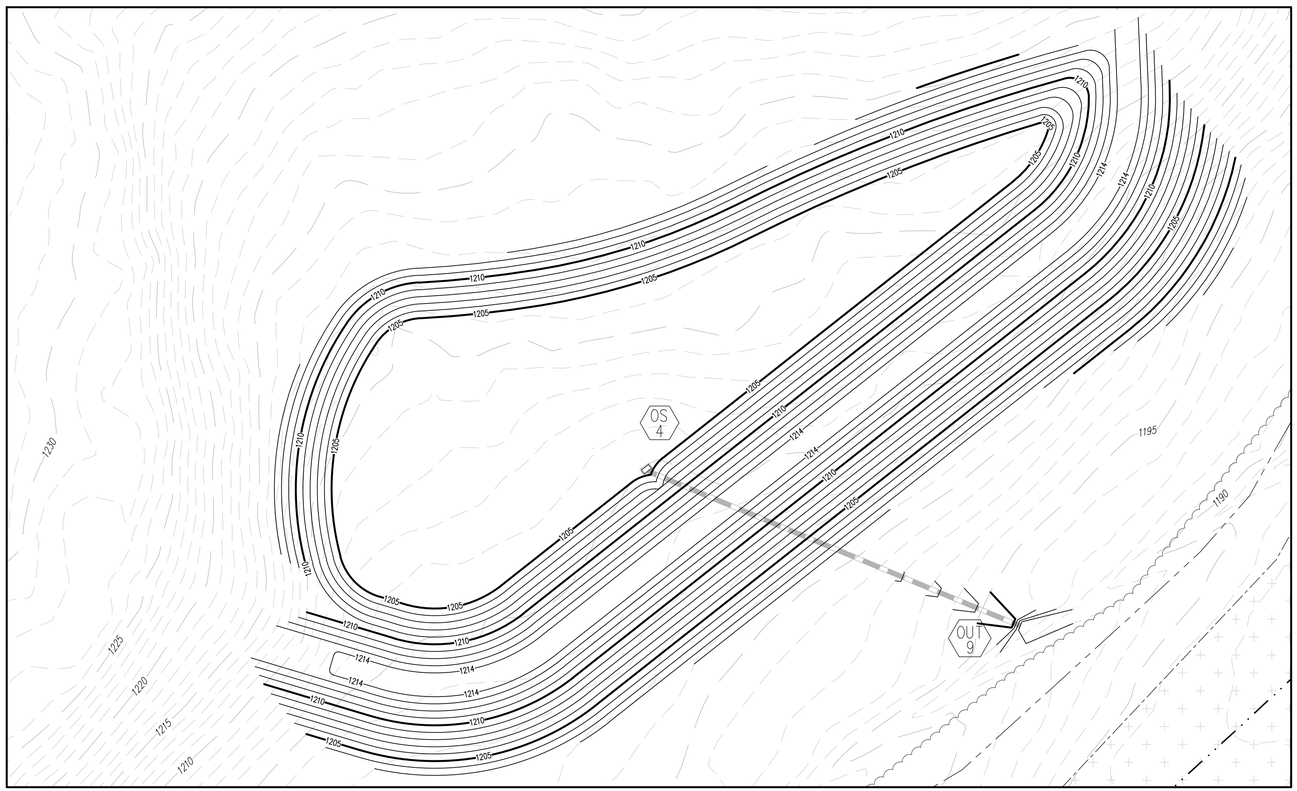

BASIN 4 ENLARGEMENT

SCALE: 1"=30'

GRAPHIC SCALE

30 0 15 30 60 120

(IN FEET)
1 inch = 30 ft.

SURVEY FEATURES LEGEND

- Property Line, Lot Line or Right of Way Line
- Adjoining Property Line
- Easement Line
- Project Benchmark

EXISTING FEATURES LEGEND

- EXISTING BUILDING — Existing Building
- Existing Curbing & Edge of Pavement
- Existing Concrete Areas
- Existing Gravel Areas
- Existing Fence / Type
- 1109 — Existing Contours w/ Elevation (1's & 2's)
- 1110 — Existing Contours w/ Elevation (5's & 10's)
- Existing Sanitary Sewer w/ Manhole
- Existing Sanitary Sewer Lateral w/ Clean Out
- Existing Water Line w/ Valve
- Existing Water Service Lateral
- Existing Storm Sewer Line w/ Inlet
- Existing Gas Line
- Existing Underground Electric
- Existing Overhead Utility Line w/ Pole
- Existing Fire Hydrant
- Existing Manhole
- Existing Utility Pole
- Existing Guy Wire
- Existing Storm Sewer Inlet Type-M
- Existing Storm Sewer Inlet Type-C
- Existing Light Pole/Standard
- Existing Sign
- Existing Tree Row
- Existing Stream
- Existing Floodplain
- Delineated Wetlands Line
- Existing Deciduous Tree
- Existing Evergreen Tree

PROPOSED FEATURES LEGEND

- PROPOSED BUILDING — PROPOSED BUILDING
- PROPOSED CURBING & EDGE OF PAVEMENT
- PROPOSED CONCRETE SIDEWALK
- PROPOSED CONCRETE AREAS
- PROPOSED BITUMINOUS PAVEMENT AREAS
- PROPOSED GRAVEL AREAS
- PROPOSED RETAINING WALL
- 1109 — PROPOSED MINOR CONTOURS W/ ELEVATION (1's & 2's)
- 1110 — PROPOSED MAJOR CONTOURS W/ ELEVATION (5's & 10's)
- 69.87 — PROPOSED SPOT ELEVATION
- 2.0% — PROPOSED GRADE SLOPE
- PROPOSED 8" SANITARY SEWER W/ MANHOLE
- PROPOSED 6" PVC SANITARY SEWER LATERAL W/ CLEAN OUT
- PROPOSED 8" WATER LINE W/ VALVE
- PROPOSED WATER SERVICE LATERAL W/ CURB BOX
- PROPOSED STORM SEWER W/ TYPE C INLET
- RD — PROPOSED STORM SEWER ROOF DRAIN
- G G G — PROPOSED GAS LINE
- ETC ETC — PROPOSED COMBINED UTILITY CONDUIT
- PROPOSED FIRE HYDRANT
- PROPOSED STORM SEWER INLET – TYPE M
- PROPOSED STORM SEWER INLET – TYPE C
- PROPOSED CLEAN-OUT
- PROPOSED TREE ROW
- VAN — PROPOSED PAINTED HANDICAPPED PARKING SYMBOLS
- 1 — PROPOSED SIGN
- DEPRESSED CURB TRANSITION CURB — PROPOSED DEPRESSED CURB W/ CURB TRANSITION
- PROPOSED LIGHT POLE

PennTerra ENGINEERING INC.

CENTRAL PENNSYLVANIA REGION OFFICE:
3075 ENTERPRISE DRIVE
SUITE 100
STATE COLLEGE, PA 16801
PH: 814-231-8285
Fax: 814-237-2308

LANCASTER REGION OFFICE:
3904 B ABEL DRIVE
COLUMBIA, PA 17512
PH: 717-522-5031
Fax: 717-522-5046

WWW.PENNTERRA.COM

COPYRIGHT 2021 BY THE ENGINEER
THE INFORMATION CONTAINED HEREON MAY NOT BE USED OR COPIED IN ANY MANNER WITHOUT THE WRITTEN PERMISSION OF THE ENGINEER EXCEPT AS OTHERWISE PROVIDED BY APPROPRIATE LAWS OR STATUTES.
© PENNTERRA ENGINEERING 2021 ALL RIGHTS RESERVED

COMMONWEALTH OF PENNSYLVANIA — REGISTERED PROFESSIONAL — C. ANTHONY FRUCHTL — ENGINEER PE-062413

Designer	EAH
Draftsman	EAH
Proj.Manager	CAF
Surveyor	BRK
Perimeter Ck.	
Book	463 Pg 1
File	19286.01-LD-GP-BLDG-EN
Layout	GP-EN-1

Date	Description

REVISIONS

TOFTREES PLANNED COMMUNITY WEST MOUNT NITTANY HEALTH OUTPATIENT CENTER

PATTON TOWNSHIP
CENTRE COUNTY
PENNSYLVANIA

FINAL LAND DEVELOPMENT PLAN

GRADING PLAN – BUILDING ENTRANCE & BASIN 4 ENLARGEMENT

PROJECT NO.	19286.01
DATE	NOVEMBER 5, 2021
SCALE	AS NOTED
SHEET NO.	10

P:\ldotproj\2019\19286\19286.01 - Phase 1\Design\pw files\final plans\19286.01-LD-GP-BLDG-EN.dwg, 11/5/2021 11:42:09 AM, 1:1

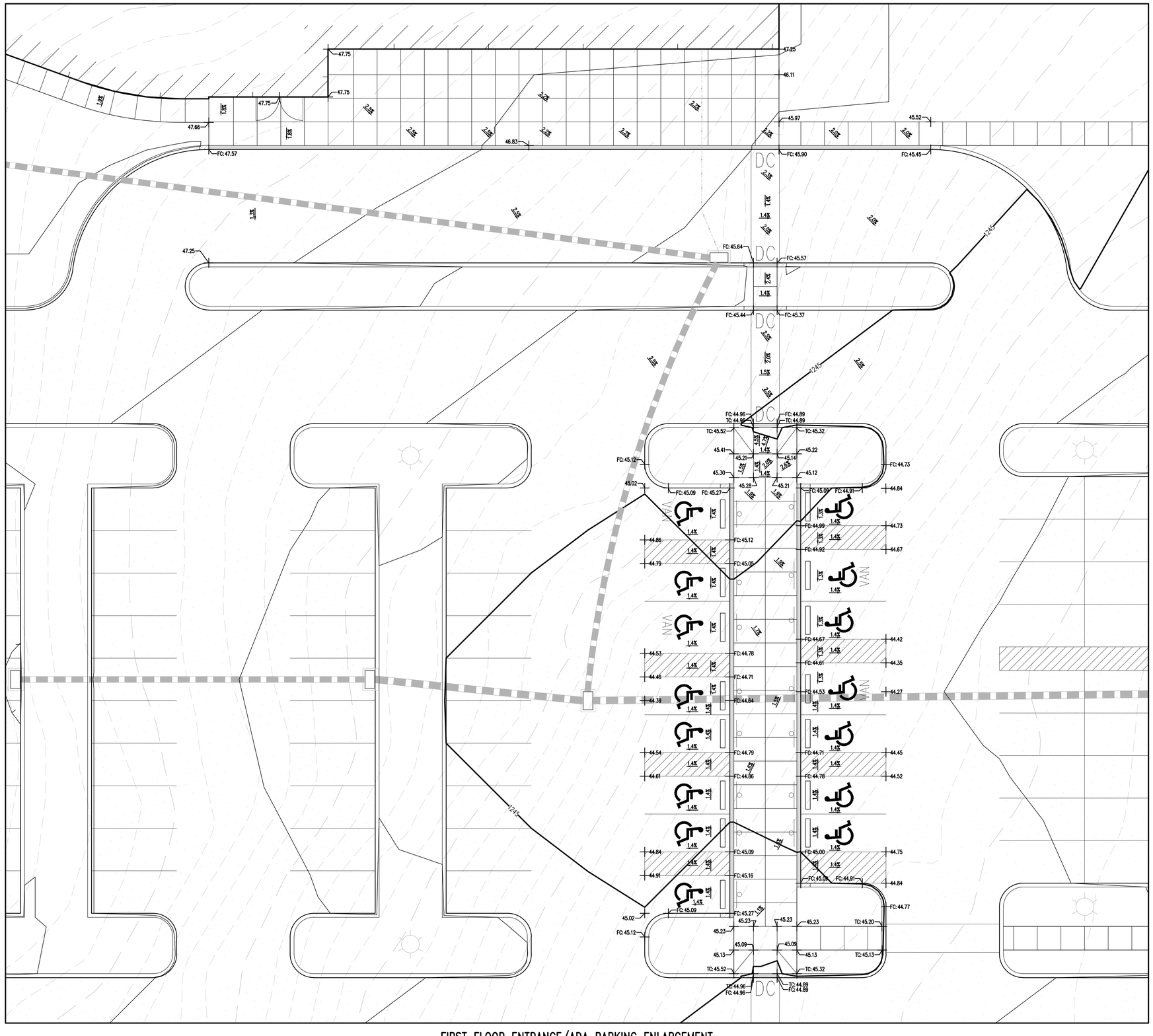

FIRST FLOOR ENTRANCE/ADA PARKING ENLARGEMENT

SCALE: 1"=10'

SURVEY FEATURES LEGEND

- Property Line, Lot Line or Right of Way Line
- Adjoining Property Line
- Easement Line
- Project Benchmark

EXISTING FEATURES LEGEND

- Existing Building
- Existing Curbing & Edge of Pavement
- Existing Concrete Areas
- Existing Gravel Areas
- Existing Fence / Type
- Existing Contours w/ Elevation (1's & 2's)
- Existing Contours w/ Elevation (5's & 10's)
- Existing Sanitary Sewer w/ Manhole
- Existing Sanitary Sewer Lateral w/ Clean Out
- Existing Water Line w/ Valve
- Existing Water Service Lateral
- Existing Storm Sewer Line w/ Inlet
- Existing Gas Line
- Existing Underground Electric
- Existing Overhead Utility Line w/ Pole
- Existing Fire Hydrant
- Existing Manhole
- Existing Utility Pole
- Existing Guy Wire
- Existing Storm Sewer Inlet Type-M
- Existing Storm Sewer Inlet Type-C
- Existing Light Pole/Standard
- Existing Sign
- Existing Tree Row
- Existing Stream
- Existing Floodplain
- Delineated Wetlands Line
- Existing Deciduous Tree
- Existing Evergreen Tree

PROPOSED FEATURES LEGEND

- PROPOSED BUILDING
- PROPOSED CURBING & EDGE OF PAVEMENT
- PROPOSED CONCRETE SIDEWALK
- PROPOSED CONCRETE AREAS
- PROPOSED BITUMINOUS PAVEMENT AREAS
- PROPOSED GRAVEL AREAS
- PROPOSED RETAINING WALL
- PROPOSED MINOR CONTOURS W/ ELEVATION (1's & 2's)
- PROPOSED MAJOR CONTOURS W/ ELEVATION (5's & 10's)
- PROPOSED SPOT ELEVATION
- PROPOSED GRADE SLOPE
- PROPOSED 8" SANITARY SEWER W/ MANHOLE
- PROPOSED 6" PVC SANITARY SEWER LATERAL W/ CLEAN OUT
- PROPOSED 8" WATER LINE W/ VALVE
- PROPOSED WATER SERVICE LATERAL W/ CURB BOX
- PROPOSED STORM SEWER W/ TYPE C INLET
- PROPOSED STORM SEWER ROOF DRAIN
- PROPOSED GAS LINE
- PROPOSED COMBINED UTILITY CONDUIT
- PROPOSED FIRE HYDRANT
- PROPOSED STORM SEWER INLET – TYPE M
- PROPOSED STORM SEWER INLET – TYPE C
- PROPOSED CLEAN-OUT
- PROPOSED TREE ROW
- PROPOSED PAINTED HANDICAPPED PARKING SYMBOLS
- PROPOSED SIGN
- PROPOSED DEPRESSED CURB W/ CURB TRANSITION
- PROPOSED LIGHT POLE

GRAPHIC SCALE

10 0 5 10 20 40

(IN FEET)

1 inch = 10 ft.

PennTerra ENGINEERING INC.

CENTRAL PENNSYLVANIA REGION OFFICE:
3075 ENTERPRISE DRIVE
SUITE 100
STATE COLLEGE, PA 16801
PH: 814-231-8285
Fax: 814-237-2308

LANCASTER REGION OFFICE:
3904 B ABEL DRIVE
COLUMBIA, PA 17512
PH: 717-522-5031
Fax: 717-522-5046

WWW.PENNTERRA.COM

COPYRIGHT 2021 BY THE ENGINEER
THE INFORMATION CONTAINED HEREON MAY NOT BE USED OR COPIED IN ANY MANNER WITHOUT THE WRITTEN PERMISSION OF THE ENGINEER EXCEPT AS OTHERWISE PROVIDED BY APPROPRIATE LAWS OR STATUTES.
© PENNTERRA ENGINEERING 2021 ALL RIGHTS RESERVED

COMMONWEALTH OF PENNSYLVANIA — REGISTERED PROFESSIONAL — C. ANTHONY FRUCHTL — ENGINEER — PE-062413

Designer	EAH
Draftsman	EAH
ProjManager	CAF
Surveyor	BRK
Perimeter Ck.	
Book	463 Pg 1
19286.01-LD-GP-ADA-PARKING-EN	
Layout	GP-ADA-PARK

Date Description

REVISIONS

TOFTREES PLANNED COMMUNITY WEST MOUNT NITTANY HEALTH OUTPATIENT CENTER

PATTON TOWNSHIP
CENTRE COUNTY
PENNSYLVANIA

FINAL LAND DEVELOPMENT PLAN

GRADING PLAN – FIRST FLOOR ENTRANCE & ADA PARKING ENLARGEMENT

PROJECT NO. 19286.01

DATE NOVEMBER 5, 2021

SCALE 1"=10'

SHEET NO. 11

P:\ddtpnp\2019\19286\19286.01 - Phase 1\Design\plot files\final plans\19286.01-LD-GP-ADA-PARKING-EN.dwg, 11/5/2021 11:43:08 AM, 1:1

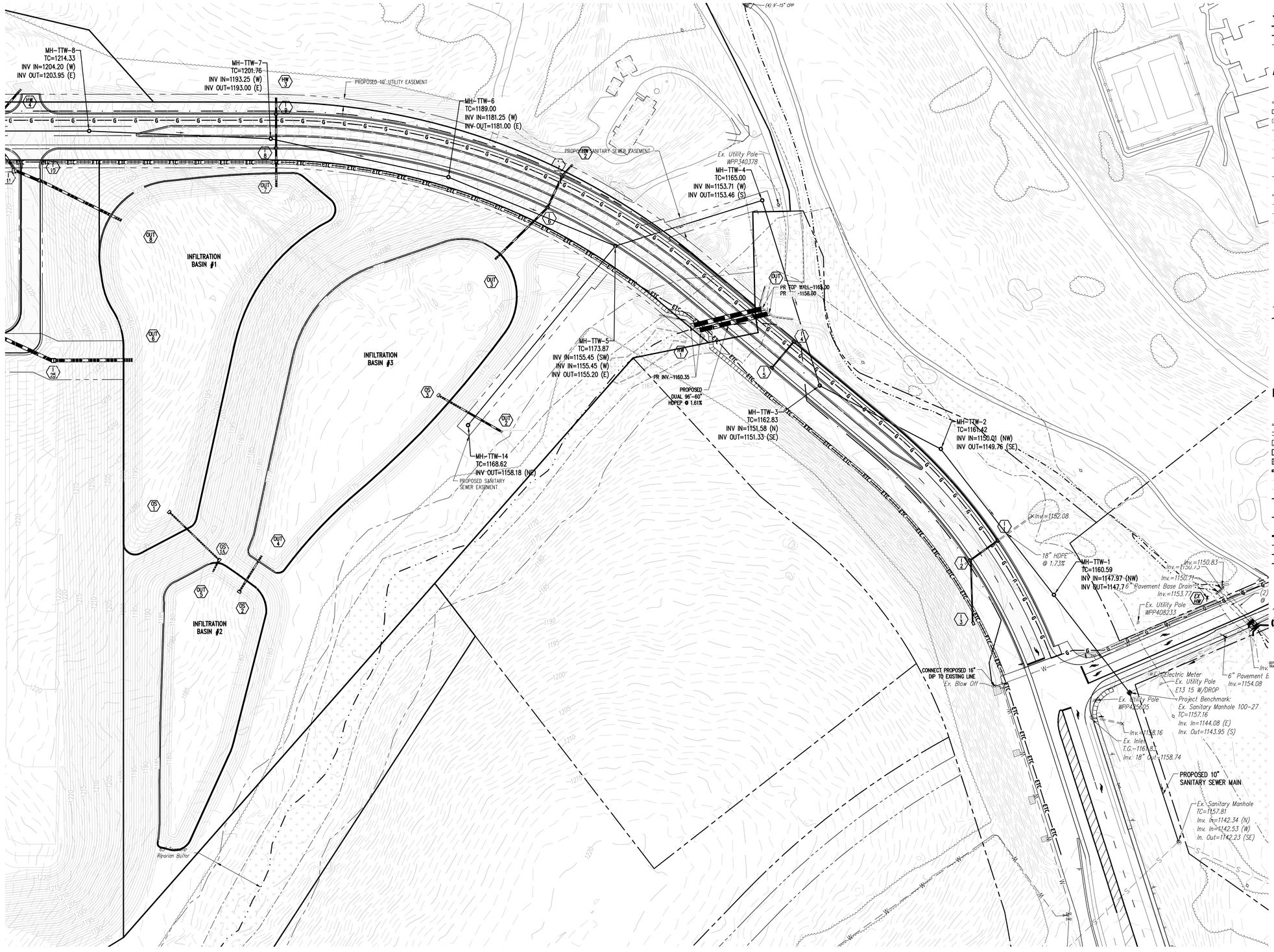

SURVEY FEATURES LEGEND

- Property Line, Lot Line or Right of Way Line
- Adjoining Property Line
- Easement Line
- Project Benchmark

EXISTING FEATURES LEGEND

- Existing Building
- Existing Curbing & Edge of Pavement
- Existing Concrete Areas
- Existing Gravel Areas
- Existing Fence / Type
- Existing Contours w/ Elevation (1's & 2's)
- Existing Contours w/ Elevation (5's & 10's)
- Existing Sanitary Sewer w/ Manhole
- Existing Sanitary Sewer Lateral w/ Clean Out
- Existing Water Line w/ Valve
- Existing Water Service Lateral
- Existing Storm Sewer Line w/ Inlet
- Existing Gas Line
- Existing Underground Electric
- Existing Overhead Utility Line w/ Pole
- Existing Fire Hydrant
- Existing Manhole
- Existing Utility Pole
- Existing Guy Wire
- Existing Storm Sewer Inlet Type-M
- Existing Storm Sewer Inlet Type-C
- Existing Light Pole/Standard
- Existing Sign
- Existing Tree Row
- Existing Stream
- Existing Floodplain
- Delineated Wetlands Line
- Existing Deciduous Tree
- Existing Evergreen Tree

PROPOSED FEATURES LEGEND

- PROPOSED BUILDING
- PROPOSED CURBING & EDGE OF PAVEMENT
- PROPOSED CONCRETE SIDEWALK
- PROPOSED CONCRETE AREAS
- PROPOSED BITUMINOUS PAVEMENT AREAS
- PROPOSED GRAVEL AREAS
- PROPOSED RETAINING WALL
- PROPOSED MINOR CONTOURS W/ ELEVATION (1's & 2's)
- PROPOSED MAJOR CONTOURS W/ ELEVATION (5's & 10's)
- PROPOSED 8" SANITARY SEWER W/ MANHOLE
- PROPOSED 6" PVC SANITARY SEWER LATERAL W/ CLEAN OUT
- PROPOSED 8" WATER LINE W/ VALVE
- PROPOSED WATER SERVICE LATERAL W/ CURB BOX
- PROPOSED STORM SEWER W/ TYPE C INLET
- PROPOSED STORM SEWER ROOF DRAIN
- PROPOSED GAS LINE
- PROPOSED COMBINED UTILITY CONDUIT
- PROPOSED FIRE HYDRANT
- PROPOSED STORM SEWER INLET - TYPE M
- PROPOSED STORM SEWER INLET - TYPE C
- PROPOSED CLEAN-OUT
- PROPOSED TREE ROW
- PROPOSED STORMWATER BASIN/ BEST MANAGEMENT PRACTICE (BMP) FACILITIES
- PROPOSED PAINTED HANDICAPPED PARKING SYMBOLS
- PROPOSED SIGN
- PROPOSED DEPRESSED CURB W/ CURB TRANSITION
- PROPOSED LIGHT POLE

GRAPHIC SCALE

60 0 30 60 120 240

(IN FEET)
1 inch = 60 ft.

PennTerra ENGINEERING INC.

CENTRAL PENNSYLVANIA REGION OFFICE:
3075 ENTERPRISE DRIVE
SUITE 100
STATE COLLEGE, PA 16801
PH: 814-231-8285
Fax: 814-237-2308

LANCASTER REGION OFFICE:
3904 B ABEL DRIVE
COLUMBIA, PA 17512
PH: 717-522-5031
Fax: 717-522-5046

WWW.PENNTERRA.COM

COPYRIGHT 2021 BY THE ENGINEER
THE INFORMATION CONTAINED HEREON MAY NOT BE USED OR COPIED IN ANY MANNER WITHOUT THE WRITTEN PERMISSION OF THE ENGINEER EXCEPT AS OTHERWISE PROVIDED BY APPROPRIATE LAWS OR STATUTES.
© PENNTERRA ENGINEERING 2021 ALL RIGHTS RESERVED

COMMONWEALTH OF PENNSYLVANIA — REGISTERED PROFESSIONAL — C. ANTHONY FRUCHTL — ENGINEER PE-062413

Designer	EAH
Draftsman	EAH
ProjManager	CAF
Surveyor	BRK
Perimeter Ck.	
Book	463 Pg 1
File	19286.01-LD-UP-EAST
Layout	UP-EAST

Date	Description
	REVISIONS

TOFTREES PLANNED COMMUNITY WEST MOUNT NITTANY HEALTH OUTPATIENT CENTER

PATTON TOWNSHIP
CENTRE COUNTY
PENNSYLVANIA

FINAL LAND DEVELOPMENT PLAN

UTILITY PLAN - EAST

PROJECT NO.	19286.01
DATE	NOVEMBER 5, 2021
SCALE	1"=60'
SHEET NO.	12

P:\ldd\proj\2019\19286\19286.01 - Phase 1\Design\plot files\final plans\19286.01-LD-UP-EAST.dwg, 11/5/2021 11:25:31 AM, 1:1

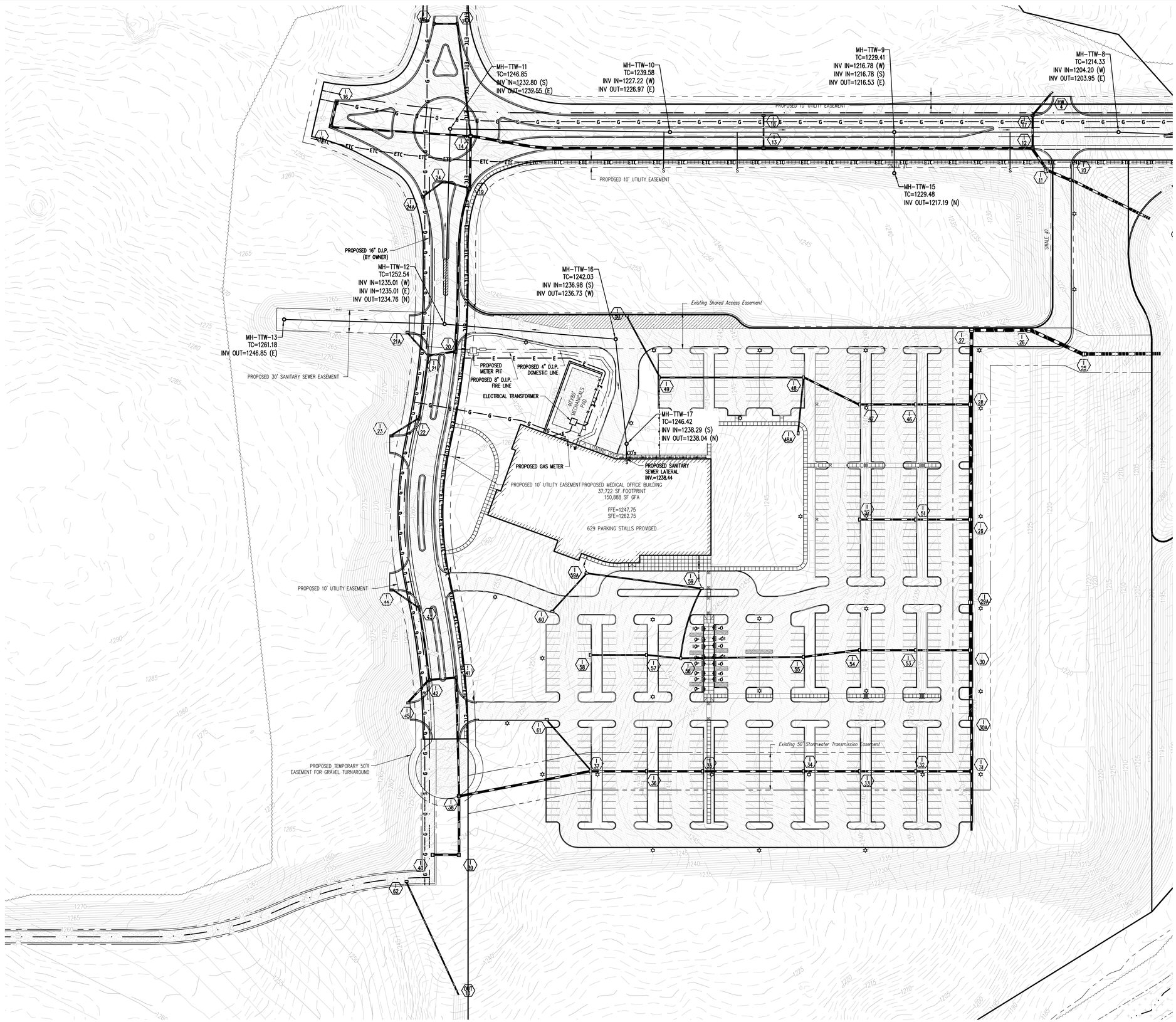

SURVEY FEATURES LEGEND

- Property Line, Lot Line or Right of Way Line
- Adjoining Property Line
- Easement Line
- Project Benchmark

EXISTING FEATURES LEGEND

- Existing Building
- Existing Curbing & Edge of Pavement
- Existing Concrete Areas
- Existing Gravel Areas
- Existing Fence / Type
- Existing Contours w/ Elevation (1's & 2's)
- Existing Contours w/ Elevation (5's & 10's)
- Existing Sanitary Sewer w/ Manhole
- Existing Sanitary Sewer Lateral w/ Clean Out
- Existing Water Line w/ Valve
- Existing Water Service Lateral
- Existing Storm Sewer Line w/ Inlet
- Existing Gas Line
- Existing Underground Electric
- Existing Overhead Utility Line w/ Pole
- Existing Fire Hydrant
- Existing Manhole
- Existing Utility Pole
- Existing Guy Wire
- Existing Storm Sewer Inlet Type-M
- Existing Storm Sewer Inlet Type-C
- Existing Light Pole/Standard
- Existing Sign
- Existing Tree Row
- Existing Stream
- Existing Floodplain
- Delineated Wetlands Line
- Existing Deciduous Tree
- Existing Evergreen Tree

PROPOSED FEATURES LEGEND

- PROPOSED BUILDING
- PROPOSED CURBING & EDGE OF PAVEMENT
- PROPOSED CONCRETE SIDEWALK
- PROPOSED CONCRETE AREAS
- PROPOSED BITUMINOUS PAVEMENT AREAS
- PROPOSED GRAVEL AREAS
- PROPOSED RETAINING WALL
- PROPOSED MINOR CONTOURS W/ ELEVATION (1's & 2's)
- PROPOSED MAJOR CONTOURS W/ ELEVATION (5's & 10's)
- PROPOSED 8" SANITARY SEWER W/ MANHOLE
- PROPOSED 6" PVC SANITARY SEWER LATERAL W/ CLEAN OUT
- PROPOSED 8" WATER LINE W/ VALVE
- PROPOSED WATER SERVICE LATERAL W/ CURB BOX
- PROPOSED STORM SEWER W/ TYPE C INLET
- PROPOSED STORM SEWER ROOF DRAIN
- PROPOSED GAS LINE
- PROPOSED COMBINED UTILITY CONDUIT
- PROPOSED FIRE HYDRANT
- PROPOSED STORM SEWER INLET – TYPE M
- PROPOSED STORM SEWER INLET – TYPE C
- PROPOSED CLEAN-OUT
- PROPOSED TREE ROW
- PROPOSED STORMWATER BASIN/ BEST MANAGEMENT PRACTICE (BMP) FACILITIES
- PROPOSED PAINTED HANDICAPPED PARKING SYMBOLS
- PROPOSED SIGN
- PROPOSED DEPRESSED CURB W/ CURB TRANSITION
- PROPOSED LIGHT POLE

GRAPHIC SCALE

60 0 30 60 120 240

(IN FEET)
1 inch = 60 ft.

PennTerra ENGINEERING INC.

CENTRAL PENNSYLVANIA REGION OFFICE:
3075 ENTERPRISE DRIVE
SUITE 100
STATE COLLEGE, PA 16801
PH: 814-231-8285
Fax: 814-237-2308

LANCASTER REGION OFFICE:
3904 B ABEL DRIVE
COLUMBIA, PA 17512
PH: 717-522-5031
Fax: 717-522-5046

WWW.PENNTERRA.COM

COPYRIGHT 2021 BY THE ENGINEER
THE INFORMATION CONTAINED HEREON MAY NOT BE USED OR COPIED IN ANY MANNER WITHOUT THE WRITTEN PERMISSION OF THE ENGINEER EXCEPT AS OTHERWISE PROVIDED BY APPROPRIATE LAWS OR STATUTES.
© PENNTERRA ENGINEERING 2021 ALL RIGHTS RESERVED

COMMONWEALTH OF PENNSYLVANIA — REGISTERED PROFESSIONAL — C. ANTHONY FRUCHTL — ENGINEER PE-062413

Designer	EAH
Draftsman	EAH
Proj.Manager	CAF
Surveyor	BRK
Perimeter Ck.	
Book	463 Pg 1
File	19286.01-LD-UP-WEST
Layout	UP-WEST

Date	Description

REVISIONS

TOFTREES PLANNED COMMUNITY WEST MOUNT NITTANY HEALTH OUTPATIENT CENTER

PATTON TOWNSHIP
CENTRE COUNTY
PENNSYLVANIA

FINAL LAND DEVELOPMENT PLAN

UTILITY PLAN - WEST

PROJECT NO.
19286.01

DATE
NOVEMBER 5, 2021

SCALE
1"=60'

SHEET NO.
13

P:\ldotproj\2019\19286\19286.01 - Phase 1\Design\plot files\final plans\19286.01-LD-UP-WEST.dwg, 11/5/2021 11:26:17 AM, 1:1

SURVEY FEATURES LEGEND

- Property Line, Lot Line or Right of Way Line
- Adjoining Property Line
- Easement Line
- Project Benchmark

EXISTING FEATURES LEGEND

- Existing Building
- Existing Curbing & Edge of Pavement
- Existing Concrete Areas
- Existing Gravel Areas
- Existing Fence / Type
- Existing Contours w/ Elevation (1's & 2's)
- Existing Contours w/ Elevation (5's & 10's)
- Existing Sanitary Sewer w/ Manhole
- Existing Sanitary Sewer Lateral w/ Clean Out
- Existing Water Line w/ Valve
- Existing Water Service Lateral
- Existing Storm Sewer Line w/ Inlet
- Existing Gas Line
- Existing Underground Electric
- Existing Overhead Utility Line w/ Pole
- Existing Fire Hydrant
- Existing Manhole
- Existing Utility Pole
- Existing Guy Wire
- Existing Storm Sewer Inlet Type–M
- Existing Storm Sewer Inlet Type–C
- Existing Light Pole/Standard
- Existing Sign
- Existing Tree Row
- Existing Stream
- Existing Floodplain
- Delineated Wetlands Line
- Existing Deciduous Tree
- Existing Evergreen Tree

PROPOSED FEATURES LEGEND

- PROPOSED BUILDING
- PROPOSED CURBING & EDGE OF PAVEMENT
- PROPOSED CONCRETE SIDEWALK
- PROPOSED CONCRETE AREAS
- PROPOSED BITUMINOUS PAVEMENT AREAS
- PROPOSED GRAVEL AREAS
- PROPOSED RETAINING WALL
- PROPOSED MINOR CONTOURS W/ ELEVATION (1's & 2's)
- PROPOSED MAJOR CONTOURS W/ ELEVATION (5's & 10's)
- PROPOSED 8" SANITARY SEWER W/ MANHOLE
- PROPOSED 6" PVC SANITARY SEWER LATERAL W/ CLEAN OUT
- PROPOSED 8" WATER LINE W/ VALVE
- PROPOSED WATER SERVICE LATERAL W/ CURB BOX
- PROPOSED STORM SEWER W/ TYPE C INLET
- PROPOSED STORM SEWER ROOF DRAIN
- PROPOSED GAS LINE
- PROPOSED COMBINED UTILITY CONDUIT
- PROPOSED FIRE HYDRANT
- PROPOSED STORM SEWER INLET – TYPE M
- PROPOSED STORM SEWER INLET – TYPE C
- PROPOSED CLEAN–OUT
- PROPOSED TREE ROW
- PROPOSED STORMWATER BASIN/ BEST MANAGEMENT PRACTICE (BMP) FACILITIES
- PROPOSED PAINTED HANDICAPPED PARKING SYMBOLS
- PROPOSED SIGN
- PROPOSED DEPRESSED CURB W/ CURB TRANSITION
- PROPOSED LIGHT POLE

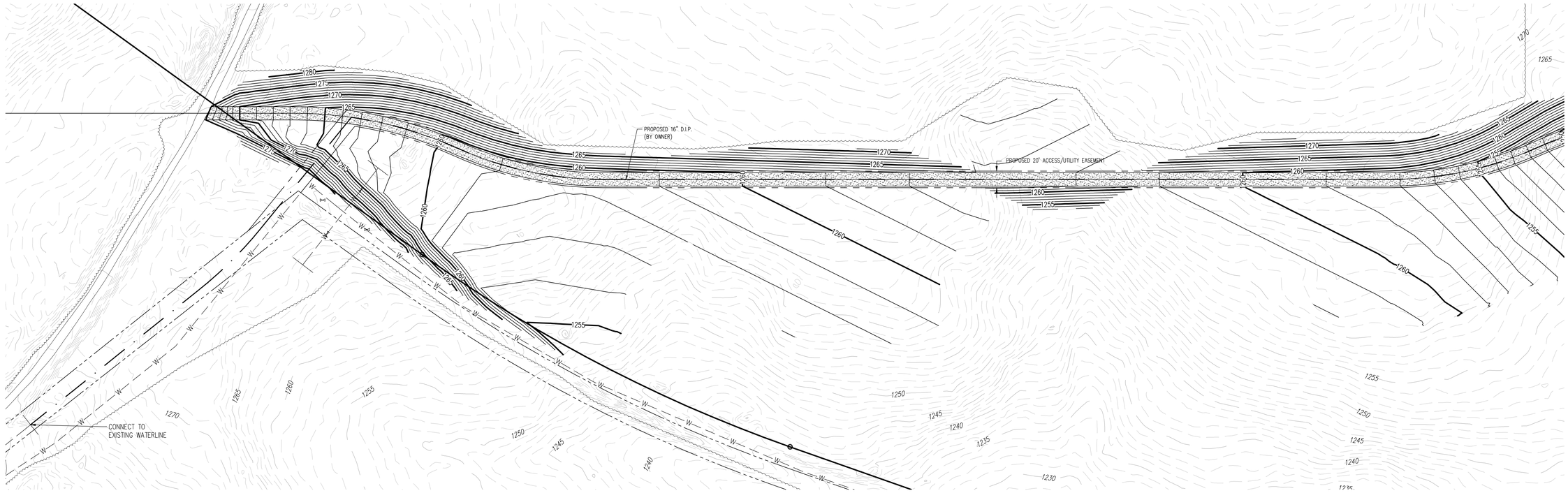

GRAPHIC SCALE

60 0 30 60 120 240

(IN FEET)
1 inch = 60 ft.

PennTerra ENGINEERING INC.

CENTRAL PENNSYLVANIA REGION OFFICE:
3075 ENTERPRISE DRIVE
SUITE 100
STATE COLLEGE, PA 16801
PH: 814–231–8285
Fax: 814–237–2308

LANCASTER REGION OFFICE:
3904 B ABEL DRIVE
COLUMBIA, PA 17512
PH: 717–522–5031
Fax: 717–522–5046

WWW.PENNTERRA.COM

COPYRIGHT 2021 BY THE ENGINEER
THE INFORMATION CONTAINED HEREON MAY NOT BE USED OR COPIED IN ANY MANNER WITHOUT THE WRITTEN PERMISSION OF THE ENGINEER EXCEPT AS OTHERWISE PROVIDED BY APPROPRIATE LAWS OR STATUES.
© PENNTERRA ENGINEERING 2021 ALL RIGHTS RESERVED

COMMONWEALTH OF PENNSYLVANIA
REGISTERED PROFESSIONAL
C. ANTHONY FRUCHTL
ENGINEER
PE–062413

Designer EAH
Draftsman EAH
Proj.Manager CAF
Surveyor BRK
Perimeter Ck.
Book 463 Pg 1
File 19286.01–LD–GP–WATER–LINE
Layout GP–WATER–LINE

Date Description
REVISIONS

TOFTREES PLANNED COMMUNITY WEST MOUNT NITTANY HEALTH OUTPATIENT CENTER

PATTON TOWNSHIP
CENTRE COUNTY
PENNSYLVANIA

FINAL LAND DEVELOPMENT PLAN

WATER MAIN EXTENSION PLAN

PROJECT NO.
19286.01

DATE
NOVEMBER 5, 2021

SCALE
1"=60'

SHEET NO.
14

P:\ddtpop\2019\19286\19286.01 - Phase 1\Design\plot files\final plans\19286.01-LD-GP-WATER-LINE.dwg, 11/5/2021 11:27:27 AM, 1:1

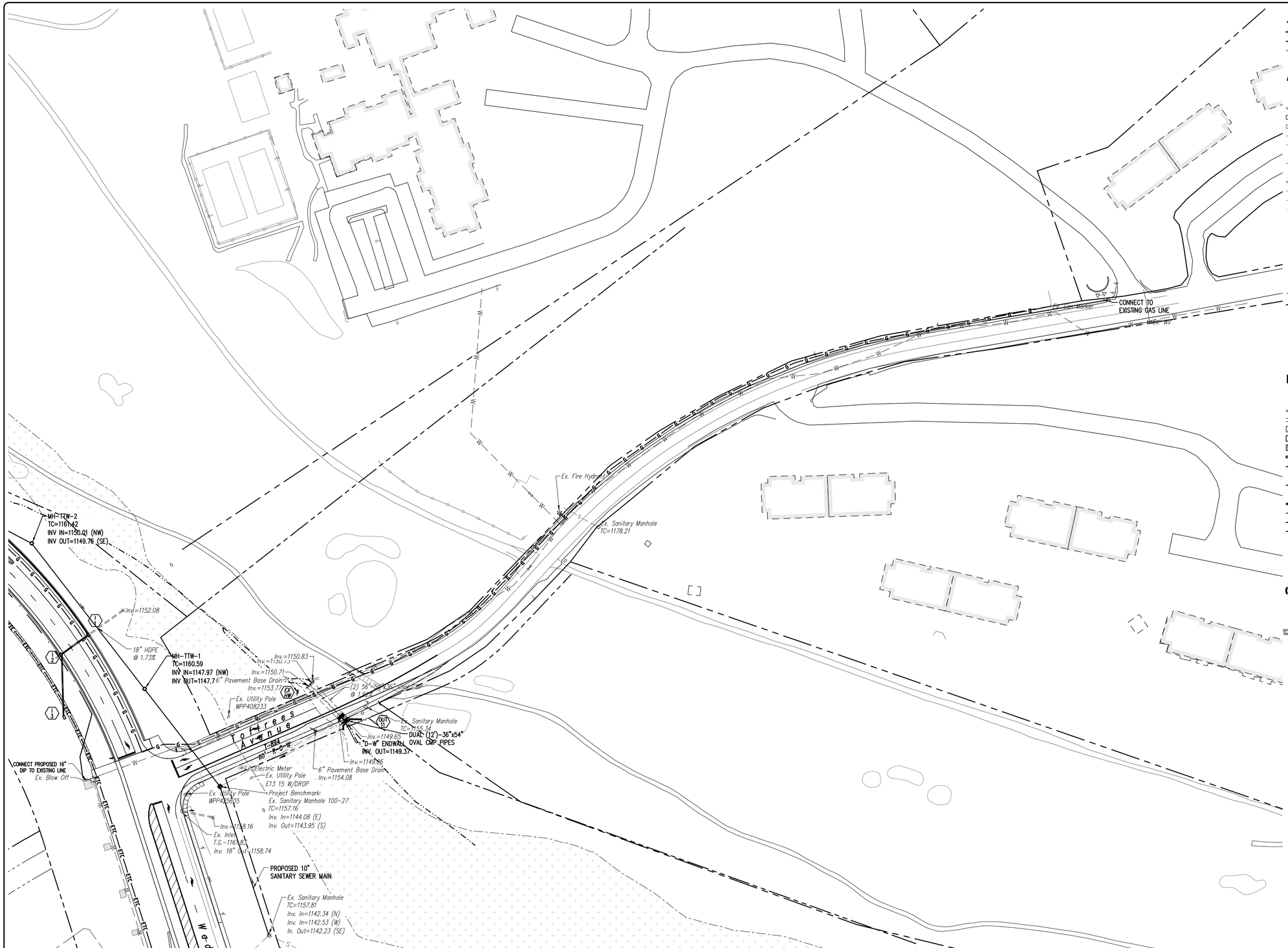

SURVEY FEATURES LEGEND

- Property Line, Lot Line or Right of Way Line
- Adjoining Property Line
- Easement Line
- Project Benchmark

EXISTING FEATURES LEGEND

- EXISTING BUILDING — Existing Building
- Existing Curbing & Edge of Pavement
- Existing Concrete Areas
- Existing Gravel Areas
- Existing Fence / Type
- Existing Sanitary Sewer w/ Manhole
- Existing Sanitary Sewer Lateral w/ Clean Out
- Existing Water Line w/ Valve
- Existing Water Service Lateral
- Existing Storm Sewer Line w/ Inlet
- Existing Gas Line
- Existing Underground Electric
- Existing Overhead Utility Line w/ Pole
- Existing Fire Hydrant
- Existing Manhole
- Existing Utility Pole
- Existing Guy Wire
- Existing Storm Sewer Inlet Type-M
- Existing Storm Sewer Inlet Type-C
- Existing Light Pole/Standard
- Existing Sign
- Existing Tree Row
- Existing Stream
- Existing Floodplain
- Delineated Wetlands Line
- Existing Deciduous Tree
- Existing Evergreen Tree

PROPOSED FEATURES LEGEND

- PROPOSED BUILDING — PROPOSED BUILDING
- PROPOSED CURBING & EDGE OF PAVEMENT
- PROPOSED CONCRETE SIDEWALK
- PROPOSED CONCRETE AREAS
- PROPOSED BITUMINOUS PAVEMENT AREAS
- PROPOSED GRAVEL AREAS
- PROPOSED RETAINING WALL
- PROPOSED 8" SANITARY SEWER W/ MANHOLE
- PROPOSED 6" PVC SANITARY SEWER LATERAL W/ CLEAN OUT
- PROPOSED 8" WATER LINE W/ VALVE
- PROPOSED WATER SERVICE LATERAL W/ CURB BOX
- PROPOSED STORM SEWER W/ TYPE C INLET
- PROPOSED STORM SEWER ROOF DRAIN
- PROPOSED GAS LINE
- PROPOSED COMBINED UTILITY CONDUIT
- PROPOSED FIRE HYDRANT
- PROPOSED STORM SEWER INLET – TYPE M
- PROPOSED STORM SEWER INLET – TYPE C
- PROPOSED CLEAN-OUT
- PROPOSED TREE ROW
- PROPOSED STORMWATER BASIN/ BEST MANAGEMENT PRACTICE (BMP) FACILITIES
- PROPOSED PAINTED HANDICAPPED PARKING SYMBOLS
- PROPOSED SIGN
- PROPOSED DEPRESSED CURB W/ CURB TRANSITION
- PROPOSED LIGHT POLE

GRAPHIC SCALE

60 0 30 60 120 240

(IN FEET)
1 inch = 60 ft.

PennTerra ENGINEERING INC.

CENTRAL PENNSYLVANIA REGION OFFICE:
3075 ENTERPRISE DRIVE
SUITE 100
STATE COLLEGE, PA 16801
PH: 814-231-8285
Fax: 814-237-2308

LANCASTER REGION OFFICE:
3904 B ABEL DRIVE
COLUMBIA, PA 17512
PH: 717-522-5031
Fax: 717-522-5046

WWW.PENNTERRA.COM

COPYRIGHT 2021 BY THE ENGINEER
THE INFORMATION CONTAINED HEREON MAY NOT BE USED OR COPIED IN ANY MANNER WITHOUT THE WRITTEN PERMISSION OF THE ENGINEER EXCEPT AS OTHERWISE PROVIDED BY APPROPRIATE LAWS OR STATUES.
© PENNTERRA ENGINEERING 2021 ALL RIGHTS RESERVED

COMMONWEALTH OF PENNSYLVANIA — REGISTERED PROFESSIONAL — C. ANTHONY FRUCHTL — ENGINEER PE-062413

Designer	EAH
Draftsman	EAH
Proj.Manager	CAF
Surveyor	BRK
Perimeter Ck.	
Book	463 Pg 1
File	19286.01-LD-UP-GAS
Layout	UP-GAS

Date	Description

REVISIONS

TOFTREES PLANNED COMMUNITY WEST MOUNT NITTANY HEALTH OUTPATIENT CENTER

PATTON TOWNSHIP
CENTRE COUNTY
PENNSYLVANIA

FINAL LAND DEVELOPMENT PLAN

GAS LINE EXTENSION PLAN

PROJECT NO.
19286.01

DATE
NOVEMBER 5, 2021

SCALE
1"=60'

SHEET NO.
15

P:\laddpro\2019\19286\19286.01 - Phase 1\Design\plot files\final plans\19286.01-LD-UP-GAS.dwg, 11/5/2021 11:28:20 AM, 1:1



PLANTING SCHEDULE

SYMBOL	KEY	QTY	COMMON NAME	BOTANICAL NAME	SIZE
STREET TREES					
	RM	65	RED MAPLE	Acer Rubrum	2-1/2" CAL.
	SO	17	SCARLET OAK	Quercus coccinea	2-1/2" CAL.
PARKING LOT / BUFFER YARD CANOPY TREES					
	GL	20	GREENSPIRE LINDEN	Tilia cordata 'Greenspire'	2-1/2" CAL.
	CP	10	CLEVELAND SELECT PEAR	Pyrus calleryana 'Cleveland Select'	2-1/2" CAL.
	SL	39	IVORY SILK LILAC	Syringa reticulata 'Ivory Silk'	2-1/2" CAL.
	HWM	25	HOT WINGS MAPLE	Acer tatrium 'Hot Wings'	2-1/2" CAL.
	AM	15	AMUR MAACKIA	Maackia amurensis	2-1/2" CAL.
	SM	14	SUGAR MAPLE	Acer Saccrharum	2-1/2" CAL.
UNDERSTORY/EVERGREEN TREES					
	ER	12	EASTERN REDBUD	Cercis canadensis	1-1/2" CAL.
	KD	12	KOUSA DOGWOOD	Cornus Kousa	6' MS
	PD	24	DOGWOOD	Cornus alternafolia	1-1/2" CAL.
	H	23	HEMLOCK	Tsuga canadensis	6' MS
SHRUBS					
	Y	63	DENSIFORMIS YEW	Taxus media 'Densiformis'	24" HT.
	W	63	WINTERBERRY HOLLY	Ilex verticulla	30"-36" HT.
	AV	72	ARROWOOD VIBURNUM	Virburnum dentatum	24"-30" HT.
	BV	36	BURKWOODII VIBURNUM	Viburnum x burkwoodii	24"-30" HT.

NOTE: ALL TREES AND SHRUBS SHALL BE PLANTED IN ACCORDANCE WITH THE PATTON TOWNSHIP STANDARDS.

LANDSCAPE NOTES:

1. THE MULCH IS TO BE DOUBLE SHREDDED HARDWOOD BARK MULCH, WELL AGED AND DARK IN COLOR. APPLY THE MULCH 4" THICK.
2. PLANT MATERIAL SUBSTITUTIONS MAY ONLY BE PERMITTED AT THE APPROVAL OF THE OWNER, TOWNSHIP AND ENGINEER OR LANDSCAPE ARCHITECT.
3. ANY PLANTINGS WHICH DO NOT SURVIVE FOR A PERIOD OF ONE YEAR FROM THE DATE OF PLANTING ARE TO BE REPLACED BY THE CONTRACTOR AT NO ADDITIONAL COST TO THE OWNER.
4. ALL NEW PLANT MATERIAL IS TO BE KEPT WATERED BY THE LANDSCAPE CONTRACTOR WHEN WORKING ON SITE UNTIL COMPLETION OF THE LANDSCAPE OR SEASON'S END (THEN RESUME NEXT SEASON UNTIL PROJECT IS COMPLETED). THE OWNER WILL BE RESPONSIBLE FOR WATERING THEREAFTER.
5. ALL DISTURBED AREAS NOT BEING PLANTED IN TREES OR SHRUBS ARE TO BE FINE GRADED AND SEEDED WITH A HARDY PERENNIAL GRASS SEED MIXTURE AND MULCHED WITH STRAW.
6. ALL CALIPER MEASUREMENTS FOR LANDSCAPING SHALL BE MEASURED AT 6" ABOVE THE ROOT BALL.
7. ALL LANDSCAPED ISLANDS SHALL BE EXCAVATED TO A MINIMUM DEPTH OF 2' AND FILLED WITH SUITABLE MATERIAL.
8. ALL ABOVEGROUND UTILITY BOXES WILL BE SCREENED PER SECTION 175-40.4.C(2) OF THE TOWNSHIP ZONING ORDINANCE.
9. AN UNOBSTRUCTED 18" OVERHANG AREA SHALL BE PROVIDED ALONG ALL PERIMETER PARKING STALLS. ALL PLANTINGS SHALL BE LOCATED OUTSIDE OF THIS OVERHANG AREA.

EXISTING FEATURES LEGEND

- Existing Building
- Existing Curbing & Edge of Pavement
- Existing Concrete Areas
- Existing Gravel Areas
- Existing Fence / Type
- Existing Contours w/ Elevation (1's & 2's)
- Existing Contours w/ Elevation (5's & 10's)
- Existing Sanitary Sewer w/ Manhole
- Existing Sanitary Sewer Lateral w/ Clean Out
- Existing Water Line w/ Valve
- Existing Water Service Lateral
- Existing Storm Sewer Line w/ Inlet
- Existing Gas Line
- Existing Underground Electric
- Existing Overhead Utility Line w/ Pole
- Existing Fire Hydrant
- Existing Manhole
- Existing Utility Pole
- Existing Guy Wire
- Existing Storm Sewer Inlet Type-M
- Existing Storm Sewer Inlet Type-C
- Existing Light Pole/Standard
- Existing Sign
- Existing Tree Row
- Existing Stream
- Existing Floodplain
- Delineated Wetlands Line
- Existing Deciduous Tree
- Existing Evergreen Tree

PROPOSED FEATURES LEGEND

- PROPOSED BUILDING
- PROPOSED CURBING & EDGE OF PAVEMENT
- PROPOSED CONCRETE SIDEWALK
- PROPOSED CONCRETE AREAS
- PROPOSED BITUMINOUS PAVEMENT AREAS
- PROPOSED GRAVEL AREAS
- PROPOSED RETAINING WALL
- PROPOSED 8" SANITARY SEWER W/ MANHOLE
- PROPOSED 6" PVC SANITARY SEWER LATERAL W/ CLEAN OUT
- PROPOSED 8" WATER LINE W/ VALVE
- PROPOSED WATER SERVICE LATERAL W/ CURB BOX
- PROPOSED STORM SEWER W/ TYPE C INLET
- PROPOSED STORM SEWER ROOF DRAIN
- PROPOSED GAS LINE
- PROPOSED COMBINED UTILITY CONDUIT
- PROPOSED FIRE HYDRANT
- PROPOSED STORM SEWER INLET - TYPE M
- PROPOSED STORM SEWER INLET - TYPE C
- PROPOSED CLEAN-OUT
- PROPOSED TREE ROW
- PROPOSED PAINTED HANDICAPPED PARKING SYMBOLS
- PROPOSED DEPRESSED CURB W/ CURB TRANSITION
- PROPOSED LIGHT POLE

SURVEY FEATURES LEGEND

- Property Line, Lot Line or Right of Way Line
- Adjoining Property Line

GRAPHIC SCALE

60 0 30 60 120 240

(IN FEET)
1 inch = 60 ft.

PennTerra ENGINEERING INC.

CENTRAL PENNSYLVANIA REGION OFFICE:
3075 ENTERPRISE DRIVE
SUITE 100
STATE COLLEGE, PA 16801
PH: 814-231-8285
Fax: 814-237-2308

LANCASTER REGION OFFICE:
3904 B ABEL DRIVE
COLUMBIA, PA 17512
PH: 717-522-5031
Fax: 717-522-5046

WWW.PENNTERRA.COM

COPYRIGHT 2021 BY THE ENGINEER
THE INFORMATION CONTAINED HEREON MAY NOT BE USED OR COPIED IN ANY MANNER WITHOUT THE WRITTEN PERMISSION OF THE ENGINEER EXCEPT AS OTHERWISE PROVIDED BY APPROPRIATE LAWS OR STATUTES.
© PENNTERRA ENGINEERING 2021 ALL RIGHTS RESERVED

COMMONWEALTH OF PENNSYLVANIA
REGISTERED PROFESSIONAL
C. ANTHONY FRUCHTL
ENGINEER
PE-062413

Designer EAH
Draftsman EAH
Proj.Manager CAF
Surveyor BRK
Perimeter Ck.
Book 463 Pg 1
File 19286.01-LD-LSP-EAST
Layout LSP-EAST

Date Description
REVISIONS

TOFTREES PLANNED COMMUNITY WEST MOUNT NITTANY HEALTH OUTPATIENT CENTER

PATTON TOWNSHIP
CENTRE COUNTY
PENNSYLVANIA

FINAL LAND DEVELOPMENT PLAN

LANDSCAPING PLAN - EAST

PROJECT NO.
19286.01
DATE
NOVEMBER 5, 2021
SCALE
1"=60'
SHEET NO.
16

P:\ddproj\2019\19286\19286.01 - Phase 1\Design\plot files\final plans\19286.01-LD-LSP-EAST.dwg, 11/5/2021 11:28:58 AM, 1:1

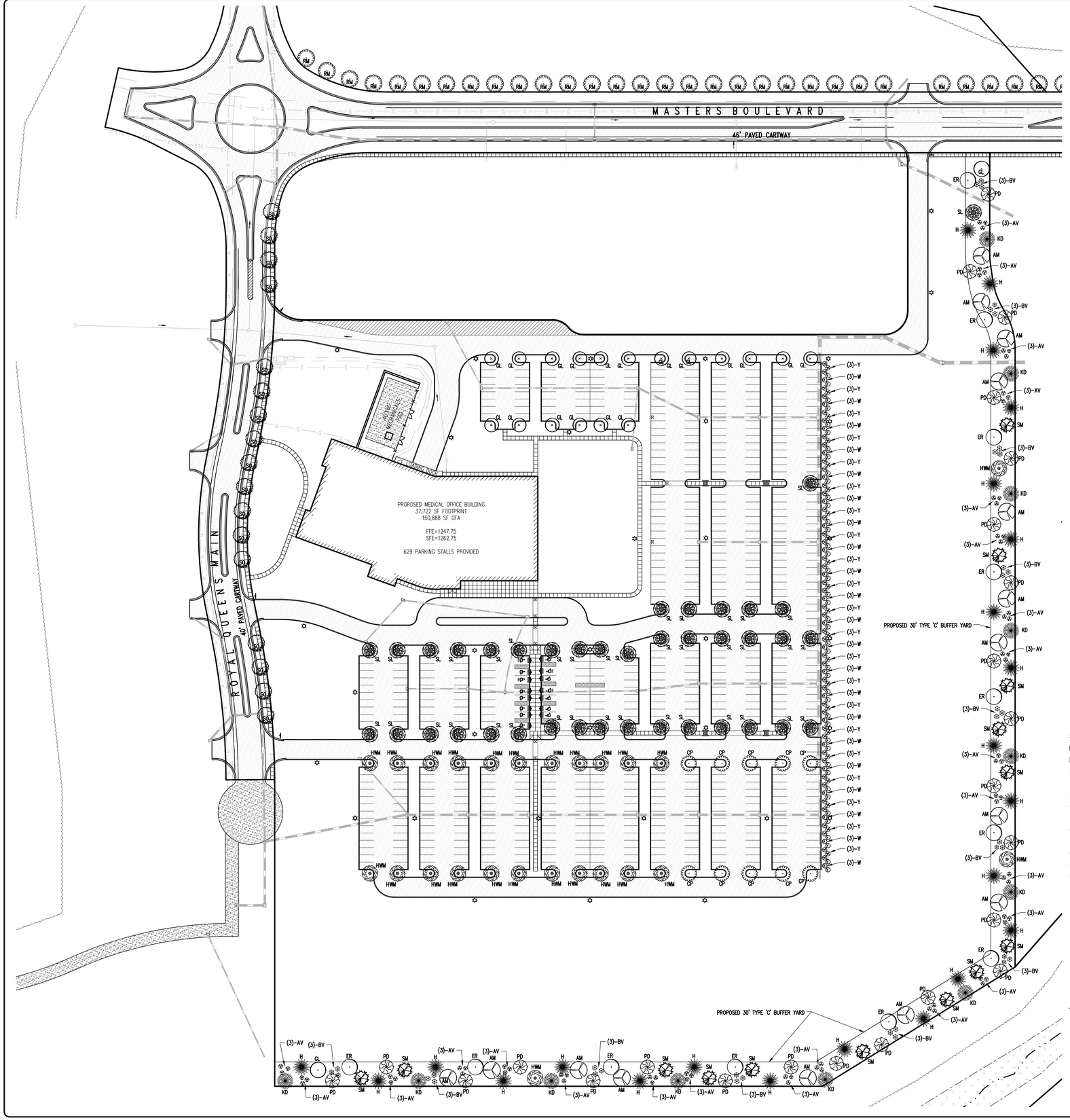

PLANTING SCHEDULE					
SYMBOL	KEY	QTY	COMMON NAME	BOTANICAL NAME	SIZE
STREET TREES					
	RM	65	RED MAPLE	Acer Rubrum	2-1/2" CAL.
	SO	17	SCARLET OAK	Quercus coccinea	2-1/2" CAL.
PARKING LOT / BUFFER YARD CANOPY TREES					
	GL	20	GREENSPIRE LINDEN	Tilia cordata 'Greenspire'	2-1/2" CAL.
	CP	10	CLEVELAND SELECT PEAR	Pyrus calleryana 'Cleveland Select'	2-1/2" CAL.
	SL	39	IVORY SILK LILAC	Syringa reticulata 'Ivory Silk'	2-1/2" CAL.
	HWM	25	HOT WINGS MAPLE	Acer tatrium 'Hot Wings'	2-1/2" CAL.
	AM	15	AMUR MAACKIA	Maackia amurensis	2-1/2" CAL.
	SM	14	SUGAR MAPLE	Acer Saccrharum	2-1/2" CAL.
UNDERSTORY/EVERGREEN TREES					
	ER	12	EASTERN REDBUD	Cercis canadensis	1-1/2" CAL.
	KD	12	KOUSA DOGWOOD	Cornus Kousa	6' MS
	PD	24	DOGWOOD	Cornus alternafolia	1-1/2" CAL.
	H	23	HEMLOCK	Tsuga canadensis	6' MS
SHRUBS					
	Y	63	DENSIFORMIS YEW	Taxus media 'Densiformis'	24" HT.
	W	63	WINTERBERRY HOLLY	Ilex verticulla	30"-36" HT.
	AV	72	ARROWOOD VIBURNUM	Virburnum dentatum	24"-30" HT.
	BV	36	BURKWOODII VIBURNUM	Viburnum x burkwoodii	24"-30" HT.

NOTE: ALL TREES AND SHRUBS SHALL BE PLANTED IN ACCORDANCE WITH THE PATTON TOWNSHIP STANDARDS.

LANDSCAPE NOTES:

1. THE MULCH IS TO BE DOUBLE SHREDDED HARDWOOD BARK MULCH, WELL AGED AND DARK IN COLOR. APPLY THE MULCH 4" THICK.
2. PLANT MATERIAL SUBSTITUTIONS MAY ONLY BE PERMITTED AT THE APPROVAL OF THE OWNER, TOWNSHIP AND ENGINEER OR LANDSCAPE ARCHITECT.
3. ANY PLANTINGS WHICH DO NOT SURVIVE FOR A PERIOD OF ONE YEAR FROM THE DATE OF PLANTING ARE TO BE REPLACED BY THE CONTRACTOR AT NO ADDITIONAL COST TO THE OWNER.
4. ALL NEW PLANT MATERIAL IS TO BE KEPT WATERED BY THE LANDSCAPE CONTRACTOR WHEN WORKING ON SITE UNTIL COMPLETION OF THE LANDSCAPE OR SEASON'S END (THEN RESUME NEXT SEASON UNTIL PROJECT IS COMPLETED). THE OWNER WILL BE RESPONSIBLE FOR WATERING THEREAFTER.
5. ALL DISTURBED AREAS NOT BEING PLANTED IN TREES OR SHRUBS ARE TO BE FINE GRADED AND SEEDED WITH A HARDY PERENNIAL GRASS SEED MIXTURE AND MULCHED WITH STRAW.
6. ALL CALIPER MEASUREMENTS FOR LANDSCAPING SHALL BE MEASURED AT 6" ABOVE THE ROOT BALL.
7. ALL LANDSCAPED ISLANDS SHALL BE EXCAVATED TO A MINIMUM DEPTH OF 2' AND FILLED WITH SUITABLE MATERIAL.
8. ALL ABOVEGROUND UTILITY BOXES WILL BE SCREENED PER SECTION 175-40.4.C(2) OF THE TOWNSHIP ZONING ORDINANCE.
9. AN UNOBSTRUCTED 18" OVERHANG AREA SHALL BE PROVIDED ALONG ALL PERIMETER PARKING STALLS. ALL PLANTINGS SHALL BE LOCATED OUTSIDE OF THIS OVERHANG AREA.

BUFFER YARD CALCULATIONS:

1. BUFFER YARD 'C' = 1,968 LF

		REQUIRED:	PROPOSED:
1.8 CANOPY TREES / 100 LF	=	35 CANOPY TREES	35
3.6 UNDERSTORY TREES / 100 LF	=	71 UNDERSTORY TREES	71
5.4 SHRUBS / 100 LF	=	106 SHRUBS	106

*AN INVENTORY OF EXISTING TREES WILL BE COMPLETED AND QUALIFYING TREES WILL BE APPLIED TOWARDS THE BUFFER YARD 'C' PLANTING REQUIREMENTS.

EXISTING FEATURES LEGEND

- Existing Building
- Existing Curbing & Edge of Pavement
- Existing Concrete Areas
- Existing Gravel Areas
- Existing Fence / Type
- Existing Contours w/ Elevation (1's & 2's)
- Existing Contours w/ Elevation (5's & 10's)
- Existing Sanitary Sewer w/ Manhole
- Existing Sanitary Sewer Lateral w/ Clean Out
- Existing Water Line w/ Valve
- Existing Water Service Lateral
- Existing Storm Sewer Line w/ Inlet
- Existing Gas Line
- Existing Underground Electric
- Existing Overhead Utility Line w/ Pole
- Existing Fire Hydrant
- Existing Manhole
- Existing Utility Pole
- Existing Guy Wire
- Existing Storm Sewer Inlet Type-M
- Existing Storm Sewer Inlet Type-C
- Existing Light Pole/Standard
- Existing Sign
- Existing Tree Row
- Existing Stream
- Existing Floodplain
- Delineated Wetlands Line
- Existing Deciduous Tree
- Existing Evergreen Tree

SURVEY FEATURES LEGEND

- Property Line, Lot Line or Right of Way Line
- Adjoining Property Line

PROPOSED FEATURES LEGEND

- PROPOSED BUILDING
- PROPOSED CURBING & EDGE OF PAVEMENT
- PROPOSED CONCRETE SIDEWALK
- PROPOSED CONCRETE AREAS
- PROPOSED BITUMINOUS PAVEMENT AREAS
- PROPOSED GRAVEL AREAS
- PROPOSED RETAINING WALL
- PROPOSED 8" SANITARY SEWER W/ MANHOLE
- PROPOSED 6" PVC SANITARY SEWER LATERAL W/ CLEAN OUT
- PROPOSED 8" WATER LINE W/ VALVE
- PROPOSED WATER SERVICE LATERAL W/ CURB BOX
- PROPOSED STORM SEWER W/ TYPE C INLET
- PROPOSED STORM SEWER ROOF DRAIN
- PROPOSED GAS LINE
- PROPOSED COMBINED UTILITY CONDUIT
- PROPOSED FIRE HYDRANT
- PROPOSED STORM SEWER INLET - TYPE M
- PROPOSED STORM SEWER INLET - TYPE C
- PROPOSED CLEAN-OUT
- PROPOSED TREE ROW
- PROPOSED PAINTED HANDICAPPED PARKING SYMBOLS
- PROPOSED DEPRESSED CURB W/ CURB TRANSITION
- PROPOSED LIGHT POLE

GRAPHIC SCALE

60 0 30 60 120 240

(IN FEET)
1 inch = 60 ft.

PennTerra ENGINEERING INC.

CENTRAL PENNSYLVANIA REGION OFFICE:
3075 ENTERPRISE DRIVE
SUITE 100
STATE COLLEGE, PA 16801
PH: 814-231-8285
Fax: 814-237-2308

LANCASTER REGION OFFICE:
3904 B ABEL DRIVE
COLUMBIA, PA 17512
PH: 717-522-5031
Fax: 717-522-5046

WWW.PENNTERRA.COM

COPYRIGHT 2021 BY THE ENGINEER
THE INFORMATION CONTAINED HEREON MAY NOT BE USED OR COPIED IN ANY MANNER WITHOUT THE WRITTEN PERMISSION OF THE ENGINEER EXCEPT AS OTHERWISE PROVIDED BY APPROPRIATE LAWS OR STATUTES.
© PENNTERRA ENGINEERING 2021 ALL RIGHTS RESERVED

COMMONWEALTH OF PENNSYLVANIA — REGISTERED PROFESSIONAL — C. ANTHONY FRUCHTL — ENGINEER PE-062413

Designer	EAH
Draftsman	EAH
Proj.Manager	CAF
Surveyor	BRK
Perimeter Ck.	
Book	463 Pg 1
File	19286.01-LD-LSP-WEST
Layout	LSP-WEST

Date	Description

REVISIONS

TOFTREES PLANNED COMMUNITY WEST MOUNT NITTANY HEALTH OUTPATIENT CENTER

PATTON TOWNSHIP
CENTRE COUNTY
PENNSYLVANIA

FINAL LAND DEVELOPMENT PLAN

LANDSCAPING PLAN - WEST

PROJECT NO.	19286.01
DATE	NOVEMBER 5, 2021
SCALE	1"=60'
SHEET NO.	17

P:\ldotproj\2019\19286\19286.01 - Phase 1\Design\pw\ files\final plans\19286.01-LD-LSP-WEST.dwg, 11/5/2021 11:29:57 AM, 1:1

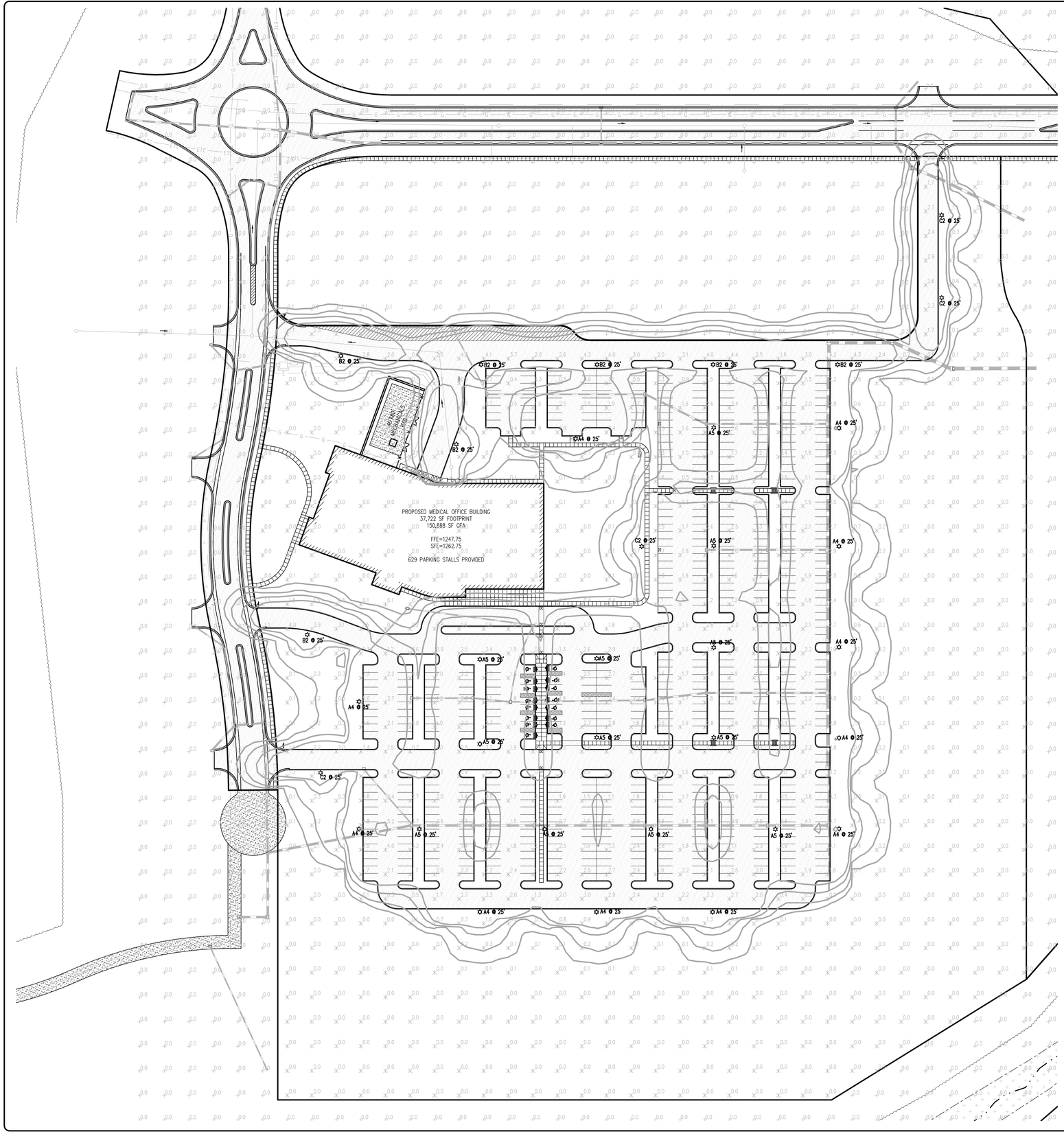
PROPOSED MEDICAL OFFICE BUILDING
37,722 SF FOOTPRINT
150,888 SF GFA
FFE=1247.75
SFE=1262.75
629 PARKING STALLS PROVIDED
B2 @ 25'
A4 @ 25'
A5 @ 25'
C2 @ 25'
A5 @ 25'
A5 @ 25'
A5



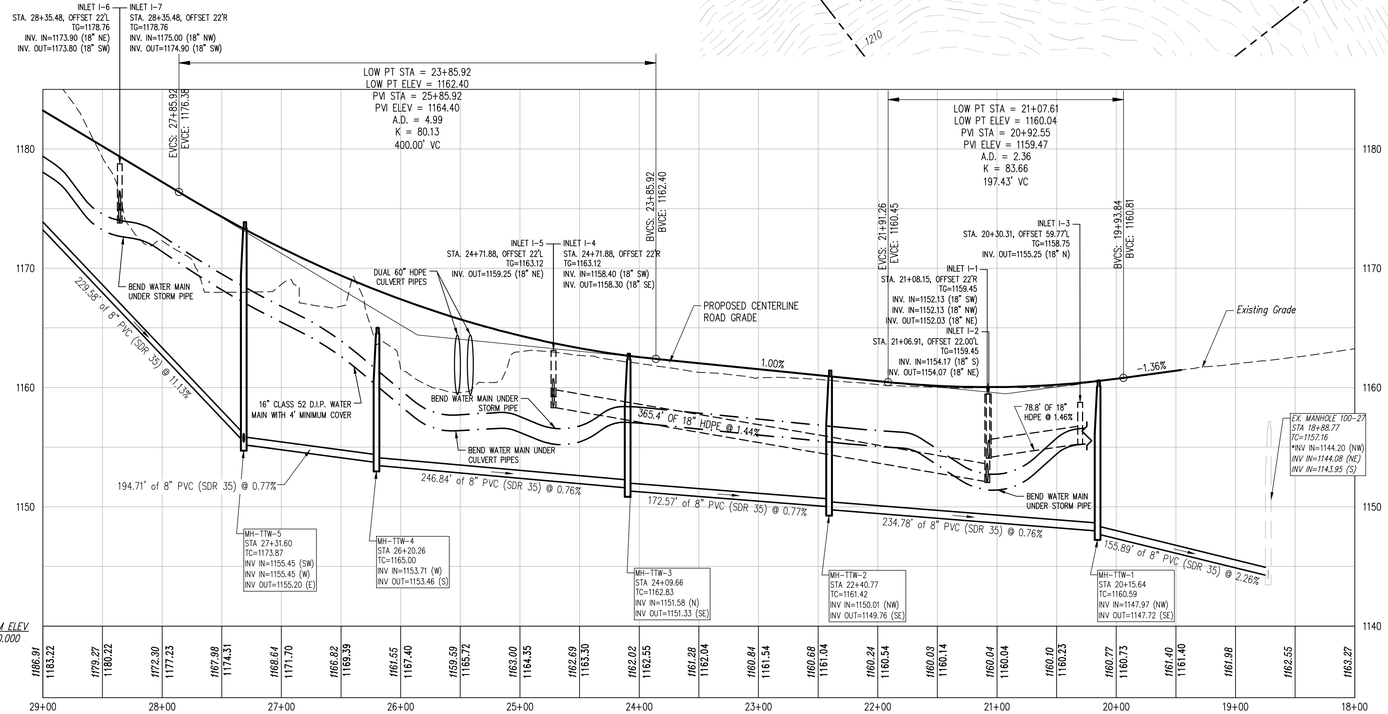

MASTERS BOULEVARD – STA: 18+00 TO 29+00

SCALE: HORIZONTAL – 1"=60'
VERTICAL – 1"=6'

GRAPHIC SCALE

60 0 30 60 120 240

(IN FEET)
1 inch = 60 ft.

PennTerra ENGINEERING INC.

CENTRAL PENNSYLVANIA REGION OFFICE:
3075 ENTERPRISE DRIVE
SUITE 100
STATE COLLEGE, PA 16801
PH: 814-231-8285
Fax: 814-237-2308

LANCASTER REGION OFFICE:
3904 B ABEL DRIVE
COLUMBIA, PA 17512
PH: 717-522-5031
Fax: 717-522-5046

WWW.PENNTERRA.COM

COPYRIGHT 2021 BY THE ENGINEER
THE INFORMATION CONTAINED HEREON MAY NOT BE USED OR COPIED IN ANY MANNER WITHOUT THE WRITTEN PERMISSION OF THE ENGINEER EXCEPT AS OTHERWISE PROVIDED BY APPROPRIATE LAWS OR STATUTES.
© PENNTERRA ENGINEERING 2021 ALL RIGHTS RESERVED

COMMONWEALTH OF PENNSYLVANIA
REGISTERED PROFESSIONAL
C. ANTHONY FRUCHTL
ENGINEER
PE-062413

Designer	EAH
Draftsman	EAH
Proj.Manager	CAF
Surveyor	BRK
Perimeter Ck.	
Book	463 Pg 1
File	19286.01-LD-MASTERS-PROFILES-2
Layout	MASTERS-PROFILES

Date	Description
	REVISIONS

TOFTREES PLANNED COMMUNITY WEST MOUNT NITTANY HEALTH OUTPATIENT CENTER

PATTON TOWNSHIP
CENTRE COUNTY
PENNSYLVANIA

FINAL LAND DEVELOPMENT PLAN

PLAN & PROFILE – MASTERS BOULEVARD

PROJECT NO.	19286.01
DATE	NOVEMBER 5, 2021
SCALE	HZ: 1"=60' VT: 1"=6'
SHEET NO.	19

P:\ldd\proj\2019\19286\19286.01 - Phase 1\Design\plot files\final plans\19286.01-LD-MASTERS-PROFILES-2.dwg, 11/5/2021 11:31:52 AM, 1:1

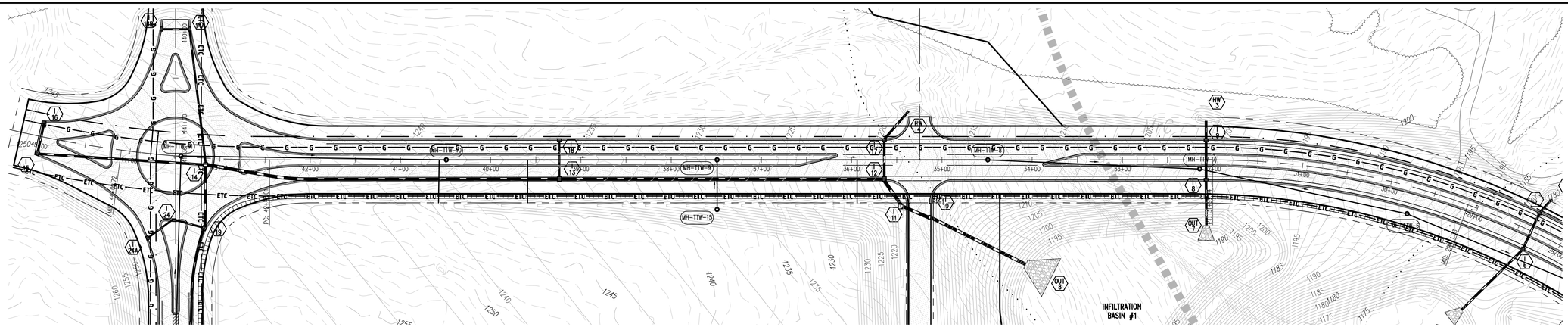

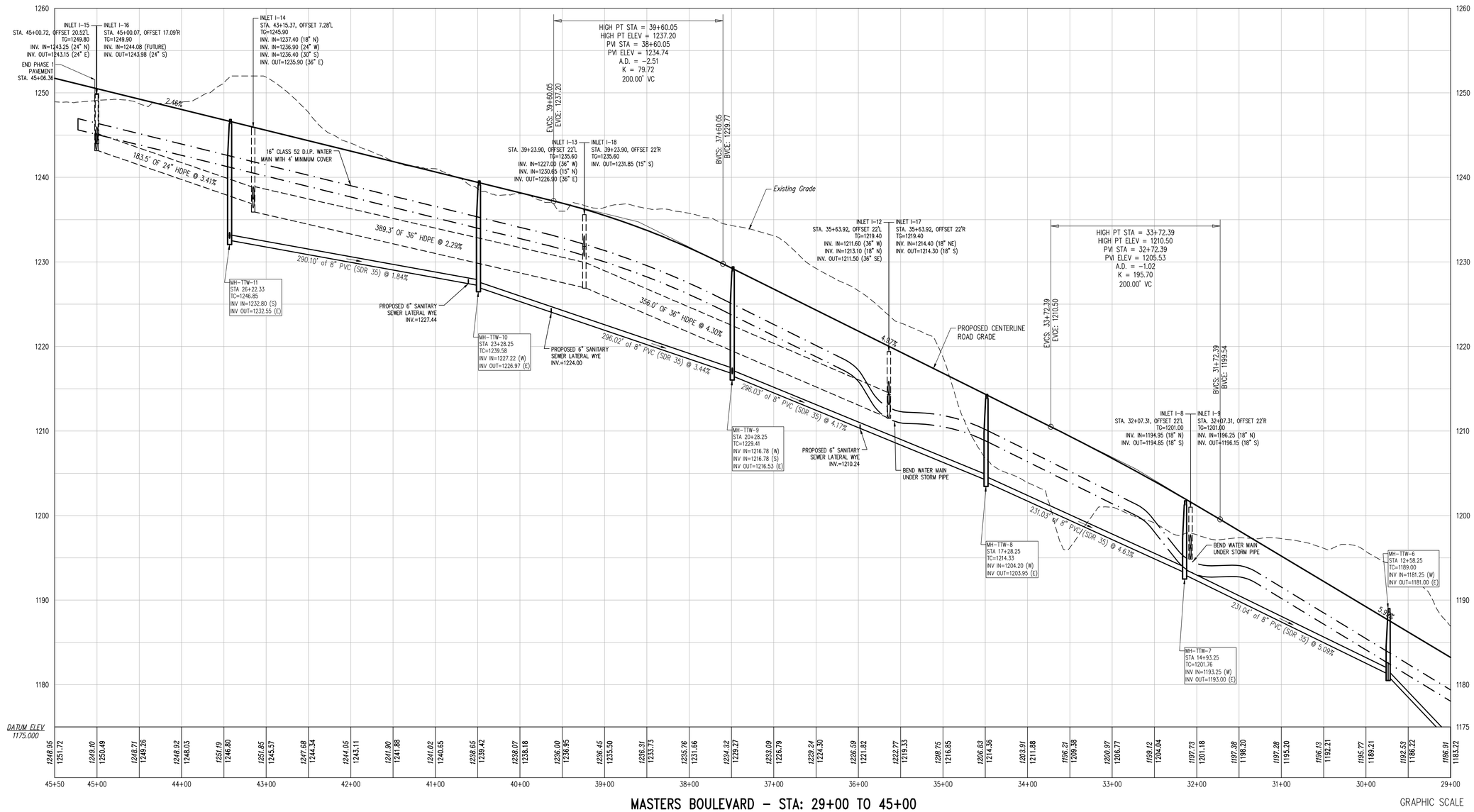

MASTERS BOULEVARD – STA: 29+00 TO 45+00

SCALE: HORIZONTAL – 1"=60'
VERTICAL – 1"=6'

GRAPHIC SCALE

60 0 30 60 120 240

(IN FEET)
1 inch = 60 ft.

PennTerra ENGINEERING INC.

CENTRAL PENNSYLVANIA REGION OFFICE:
3075 ENTERPRISE DRIVE
SUITE 100
STATE COLLEGE, PA 16801
PH: 814-231-8285
Fax: 814-237-2308

LANCASTER REGION OFFICE:
3904 B ABEL DRIVE
COLUMBIA, PA 17512
PH: 717-522-5031
Fax: 717-522-5046

WWW.PENNTERRA.COM

COPYRIGHT 2021 BY THE ENGINEER
THE INFORMATION CONTAINED HEREON MAY NOT BE USED OR COPIED IN ANY MANNER WITHOUT THE WRITTEN PERMISSION OF THE ENGINEER EXCEPT AS OTHERWISE PROVIDED BY APPROPRIATE LAWS OR STATUTES.
© PENNTERRA ENGINEERING 2021
ALL RIGHTS RESERVED

COMMONWEALTH OF PENNSYLVANIA
REGISTERED PROFESSIONAL
C. ANTHONY FRUCHTL
ENGINEER
PE-062413

Designer EAH
Draftsman EAH
Proj.Manager CAF
Surveyor BRK
Perimeter Ck.
Book 463 Pg 1
File 19286.01-LD-MASTERS-PROFILES-1
Layout MASTERS-PROFILES

Date	Description
	REVISIONS

TOFTREES PLANNED COMMUNITY WEST MOUNT NITTANY HEALTH OUTPATIENT CENTER

PATTON TOWNSHIP
CENTRE COUNTY
PENNSYLVANIA

FINAL LAND DEVELOPMENT PLAN

PLAN & PROFILE – MASTERS BOULEVARD

PROJECT NO.
19286.01

DATE
NOVEMBER 5, 2021

SCALE
HZ: 1"=60'
VT: 1"=6'

SHEET NO.
20

P:\ldtproj\2019\19286\19286.01 - Phase 1\Design\xl files\final plans\19286.01-LD-MASTERS-PROFILES-1.dwg, 11/5/2021 11:32:44 AM, 1:1

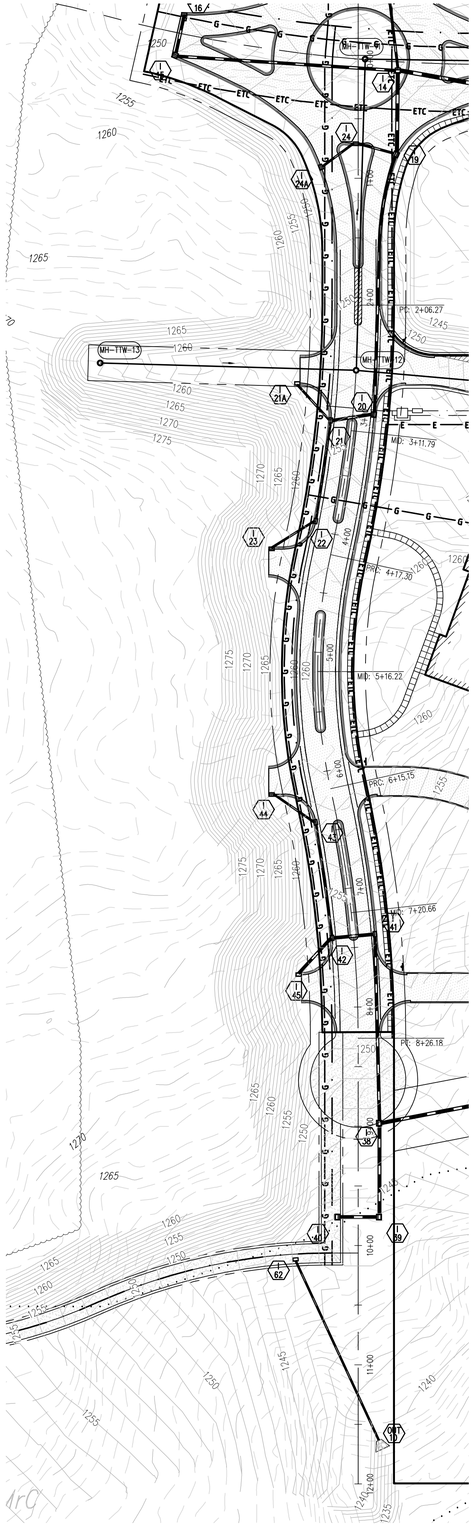

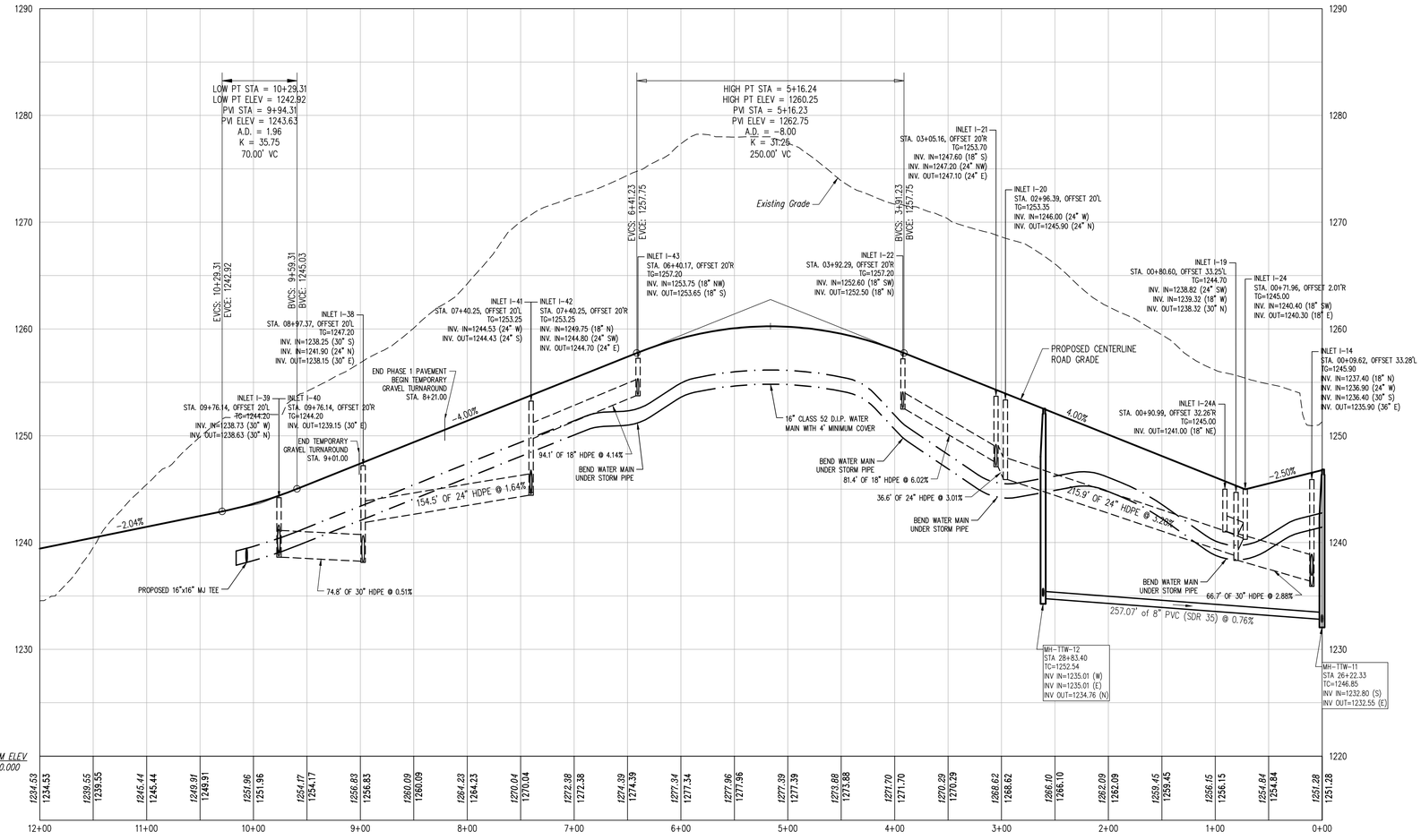

ROYAL QUEENS MAIN - STA: 00+00 TO 12+00

SCALE: HORIZONTAL - 1"=60'
VERTICAL - 1"=6'

GRAPHIC SCALE
60 0 30 60 120 240
(IN FEET)
1 inch = 60 ft.

PennTerra ENGINEERING INC.

CENTRAL PENNSYLVANIA REGION OFFICE:
3075 ENTERPRISE DRIVE
SUITE 100
STATE COLLEGE, PA 16801
PH: 814-231-8285
Fax: 814-237-2308

LANCASTER REGION OFFICE:
3904 B ABEL DRIVE
COLUMBIA, PA 17512
PH: 717-522-5031
Fax: 717-522-5046

WWW.PENNTERRA.COM

COPYRIGHT 2021 BY THE ENGINEER
THE INFORMATION CONTAINED HEREON MAY NOT BE USED OR COPIED IN ANY MANNER WITHOUT THE WRITTEN PERMISSION OF THE ENGINEER EXCEPT AS OTHERWISE PROVIDED BY APPROPRIATE LAWS OR STATUTES.
© PENNTERRA ENGINEERING 2021 ALL RIGHTS RESERVED

COMMONWEALTH OF PENNSYLVANIA
REGISTERED PROFESSIONAL
C. ANTHONY FRUCHTL
ENGINEER
PE-062413

Designer	EAH
Draftsman	EAH
ProjManager	CAF
Surveyor	BRK
Perimeter Ck.	
Book	463 Pg 1
File	19286.01-LD-ROYAL-QUEENS-MAIN-PROFILES-1
Layout	ROYAL-QUEENS-MAIN-PP

Date	Description
	REVISIONS

TOFTREES PLANNED COMMUNITY WEST MOUNT NITTANY HEALTH OUTPATIENT CENTER

PATTON TOWNSHIP
CENTRE COUNTY
PENNSYLVANIA

FINAL LAND DEVELOPMENT PLAN

PLAN & PROFILE - ROYAL QUEENS MAIN

PROJECT NO.
19286.01

DATE
NOVEMBER 5, 2021

SCALE
HZ: 1"=60'
VT: 1"=6'

SHEET NO.
21

P:\lddpnrvy\2019\19286\19286.01 - Phase 1\Design\plot files\final plans\19286.01-LD-ROYAL-QUEENS-MAIN-PROFILES-1.dwg, 11/5/2021 11:33:36 AM, 1:1

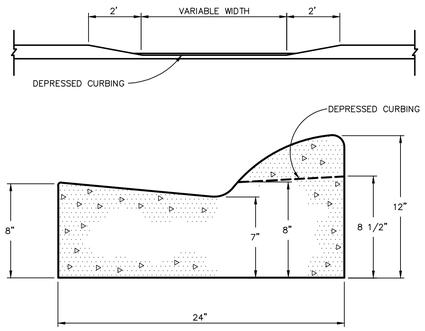

DEPRESSED ROLLED CONCRETE CURB & GUTTER
NOT TO SCALE

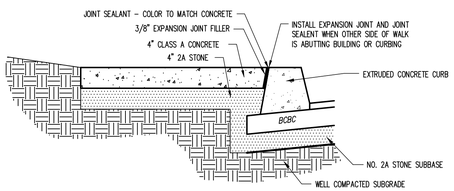

EXTRUDED CONCRETE CURB WITH CONCRETE SIDEWALK
NOT TO SCALE

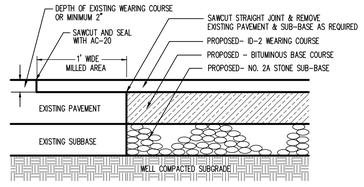

NOTE: WHERE NEW PAVEMENT MEETS EXISTING PAVEMENT SAWCUT & MILL 1' WIDE MINIMUM BY DEPTH OF EXISTING WEARING COURSE

PAVEMENT NOTCH DETAIL
NOT TO SCALE

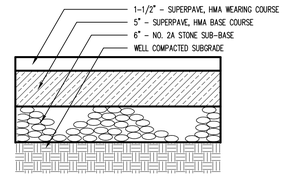

HEAVY DUTY PAVEMENT SECTION (ON-SITE)
NOT TO SCALE

WEARING SURFACE:
SUPERPAVE ASPHALT MIXTURE DESIGN, HMA WEARING COURSE
PG 64-22, < 0.3 MILLION ESAL'S, 9.5 MM MIX,
1-1/2" DEPTH, SRL-M

BASE COURSE SURFACE:
SUPERPAVE ASPHALT MIXTURE DESIGN, HMA BASE COURSE
PG 64-22, < 0.3 MILLION ESAL'S, 25.0 MM MIX,
5" DEPTH



NOT TO SCALE

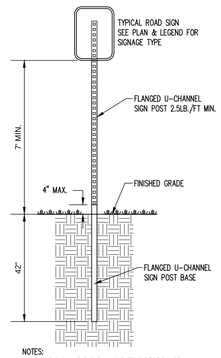

NOTES:
1. MOUNT SIGN AT RIGHT ANGLE TO DIRECTION OF TRAFFIC FLOW.
2. PROVIDE A MINIMUM CLEARANCE OF ONE FOOT FROM FACE OF CURB.

SIGN POST DETAIL
NOT TO SCALE

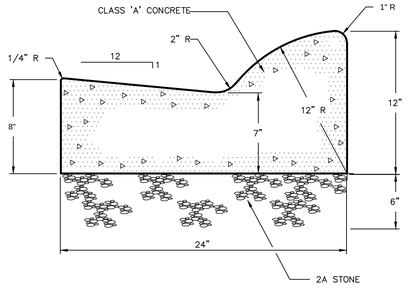

ROLLED CONCRETE CURB & GUTTER
NOT TO SCALE

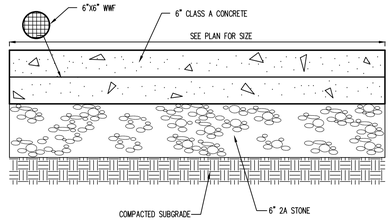

MECHANICAL UNIT PAD DETAIL
NOT TO SCALE

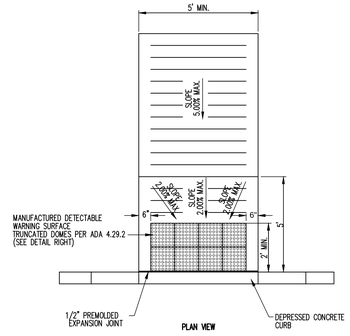

HANDICAP ACCESS TYPE B
NOT TO SCALE

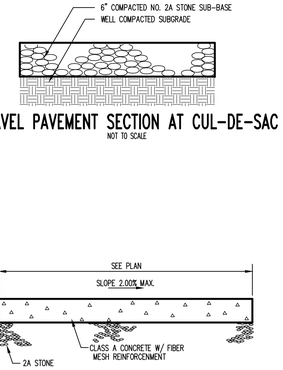

GRAVEL PAVEMENT SECTION AT CUL-DE-SAC
NOT TO SCALE

CEMENT CONCRETE SIDEWALK
NOT TO SCALE

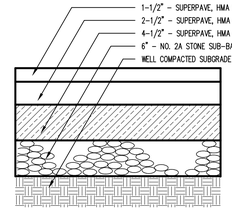

ROADWAY PAVEMENT SECTION (COLLECTOR ROADS)
NOT TO SCALE

WEARING SURFACE:
SUPERPAVE ASPHALT MIXTURE DESIGN, HMA WEARING COURSE
PG 64-22, < 0.3 MILLION ESAL'S, 9.5 MM MIX,
1-1/2" DEPTH, SRL-M

BINDER COURSE SURFACE:
SUPERPAVE ASPHALT MIXTURE DESIGN, HMA BINDER COURSE
PG 64-22, < 0.3 MILLION ESAL'S, 19.0 MM MIX,
2-1/2" DEPTH

BASE COURSE SURFACE:
SUPERPAVE ASPHALT MIXTURE DESIGN, HMA BASE COURSE
PG 64-22, < 0.3 MILLION ESAL'S, 25.0 MM MIX,
4-1/2" DEPTH

STANDARD PAVEMENT SECTION (LOCAL ROADS & ON-SITE)
NOT TO SCALE

WEARING SURFACE:
SUPERPAVE ASPHALT MIXTURE DESIGN, HMA WEARING COURSE
PG 64-22, < 0.3 MILLION ESAL'S, 9.5 MM MIX,
1-1/2" DEPTH, SRL-M

BASE COURSE SURFACE:
SUPERPAVE ASPHALT MIXTURE DESIGN, HMA BASE COURSE
PG 64-22, < 0.3 MILLION ESAL'S, 25.0 MM MIX,
4 1/2" DEPTH

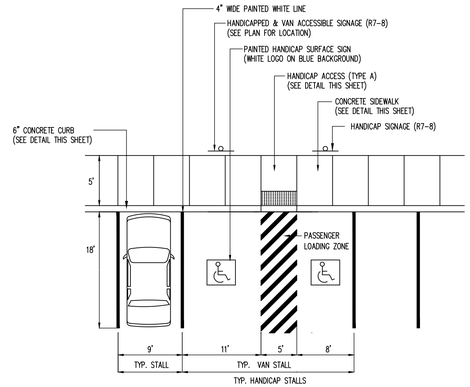

TYPICAL HANDICAP PARKING
NOT TO SCALE

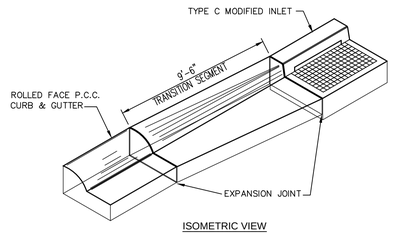

ISOMETRIC VIEW

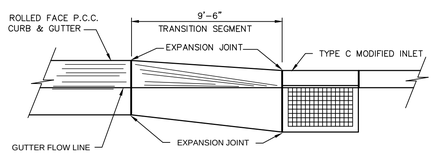

PLAN VIEW

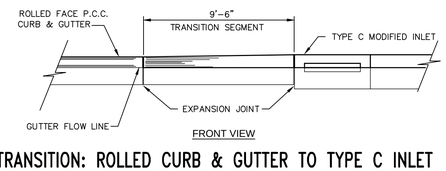

FRONT VIEW

TRANSITION: ROLLED CURB & GUTTER TO TYPE C INLET
NOT TO SCALE

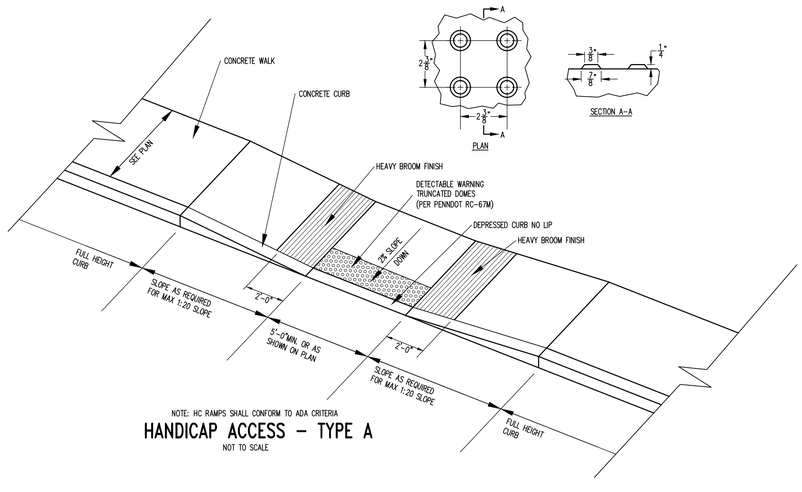

NOTE: HC RAMPS SHALL CONFORM TO ADA CRITERIA

HANDICAP ACCESS – TYPE A
NOT TO SCALE

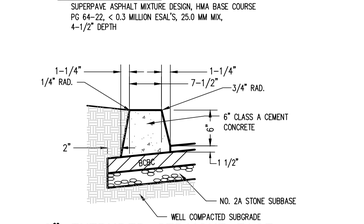

6" EXTRUDED STRAIGHT FACE CONCRETE CURB (PERIMETER PARKING & ISLANDS)
NOT TO SCALE

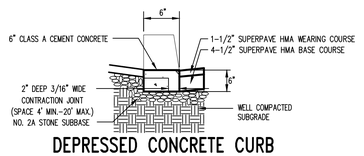

DEPRESSED CONCRETE CURB
NOT TO SCALE

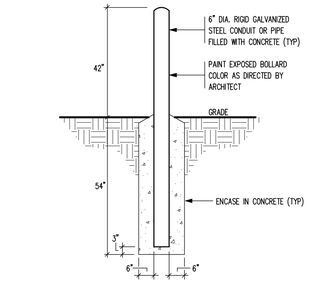

VEHICLE BOLLARD
NOT TO SCALE

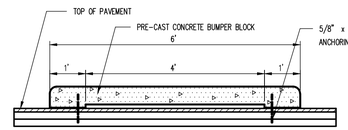

CONCRETE BUMPER BLOCK
NOT TO SCALE

PennTerra ENGINEERING INC.

CENTRAL PENNSYLVANIA REGION OFFICE:
3075 ENTERPRISE DRIVE
SUITE 100
STATE COLLEGE, PA 16801
PH: 814-231-8285
Fax: 814-237-2308

LANCASTER REGION OFFICE:
3904 B ABEL DRIVE
COLUMBIA, PA 17512
PH: 717-522-5031
Fax: 717-522-5046

WWW.PENNTERRA.COM

COPYRIGHT 2021 BY THE ENGINEER
THE INFORMATION CONTAINED HEREON MAY NOT BE USED OR COPIED IN ANY MANNER WITHOUT THE WRITTEN PERMISSION OF THE ENGINEER EXCEPT AS OTHERWISE PROVIDED BY APPROPRIATE LAWS OR STATUTES.
© PENNTERRA ENGINEERING 2021 ALL RIGHTS RESERVED

COMMONWEALTH OF PENNSYLVANIA – REGISTERED PROFESSIONAL – C. ANTHONY FRUCHTL – ENGINEER – PE-062413

Designer	EAH
Draftsman	EAH
Proj.Manager	CAF
Surveyor	BRK
Perimeter Ck.	
Book	463 Pg 1
File	19286.01-DETAILS-1
Layout	DETAILS

Date	Description
	REVISIONS

TOFTREES PLANNED COMMUNITY WEST MOUNT NITTANY HEALTH OUTPATIENT CENTER

PATTON TOWNSHIP
CENTRE COUNTY
PENNSYLVANIA

FINAL LAND DEVELOPMENT PLAN

GENERAL CONSTRUCTION DETAILS

PROJECT NO.	
19286.01	
DATE	
NOVEMBER 5, 2021	
SCALE	SHEET NO.
AS NOTED	22

P:\ldotpro\2019\19286\19286.01 - Phase 1\Design\plot files\final plans\19286.01-DETAILS-1.dwg, 11/5/2021 11:33:59 AM, 1:1

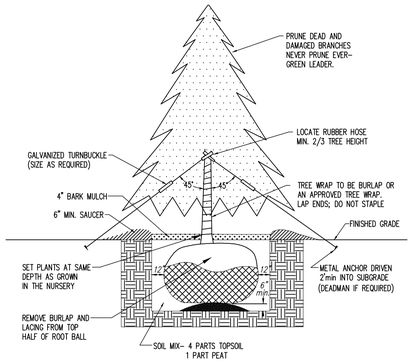

NOTES:
1. IN PAVED AREAS- STONE SAUCER IN A SQUARE
2. IN GRASS AREAS- MULCH SAUCER IN A CIRCLE
3. AFTER PLANTING- THE SAUCER SHOULD BE FLOODED WITH WATER TWICE IN THE FIRST 24 HRS.

TYPICAL EVERGREEN PLANTING

NOT TO SCALE

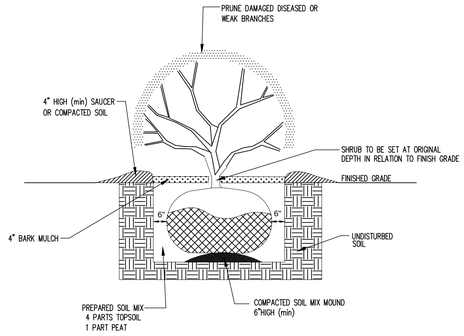

TYPICAL SHRUB PLANTING

NOT TO SCALE

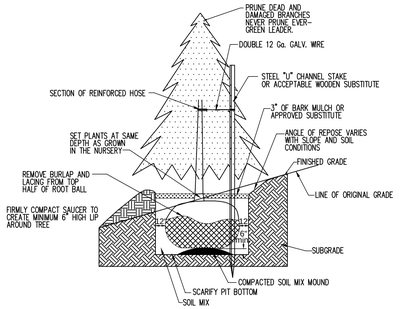

NOTES
1. DO NOT DAMAGE MAIN ROOTS WHEN INSTALLING TREE STAKE.
2. SET TREE AT SAME DEPTH AS GROWN IN THE NURSERY.
3. WATER THOROUGHLY SUBSEQUENT TO INSTALLATION.
4. PRUNE ALL DAMAGED, DISEASED, OR WEAK LIMBS OR ROOTS.
5. SET SUPPORT STAKE A MIN. OF 12" FROM THE TREE TRUNK.
6. DO NOT ALLOW AIR POCKETS TO FORM WHEN BACKFILLING.
7. REMOVE TREE STAKE AND WIRE 2 YEARS AFTER INSTALLATION.

TYPICAL EVERGREEN PLANTING (ON-SLOPES)

NOT TO SCALE

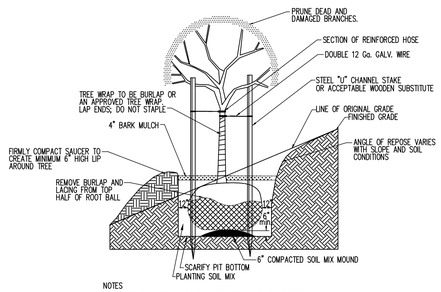

NOTES
1. DO NOT DAMAGE MAIN ROOTS WHEN INSTALLING TREE STAKES.
2. SET TREE AT SAME DEPTH AS GROWN IN THE NURSERY.
3. WATER THOROUGHLY SUBSEQUENT TO INSTALLATION.
4. PRUNE ALL DAMAGED, DISEASED, OR WEAK LIMBS OR ROOTS.
5. SET SUPPORT STAKES A MIN. OF 12" FROM THE TREE TRUNK.
6. DO NOT ALLOW AIR POCKETS TO FORM WHEN BACKFILLING.
7. REMOVE TREE STAKE AND WIRE 2 YEARS AFTER INSTALLATION.

TYPICAL DECIDUOUS TREE PLANTING (ON-SLOPES)

NOT TO SCALE

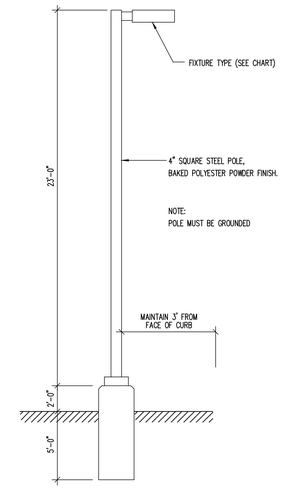

SITE LIGHTING POLE DETAIL

NOT TO SCALE

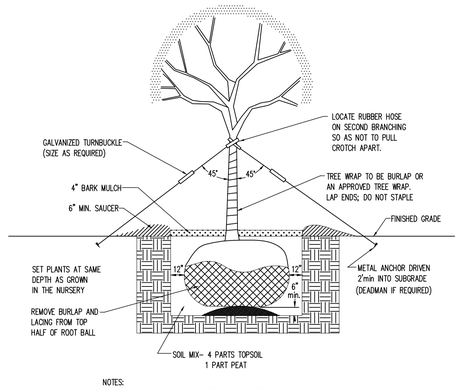

NOTES:
1. IN PAVED AREAS- STONE SAUCER IN A SQUARE
2. IN GRASS AREAS- MULCH SAUCER IN A CIRCLE
3. AFTER PLANTING- THE SAUCER SHOULD BE FLOODED WITH WATER TWICE IN THE FIRST 24 HRS.

TYPICAL DECIDUOUS TREE PLANTING

NOT TO SCALE

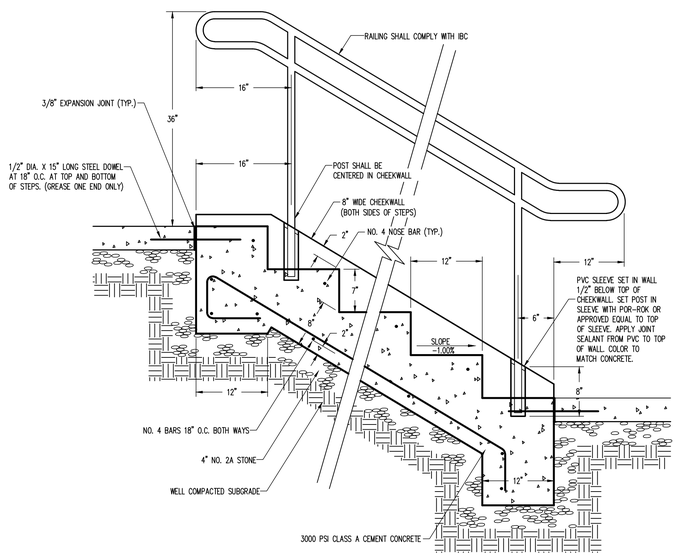

CONCRETE STAIRWAY W/CHEEKWALL

NOT TO SCALE

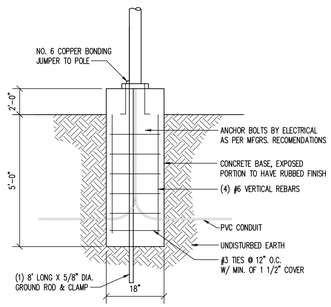

POLE LIGHT BASE DETAIL

NOT TO SCALE

PennTerra ENGINEERING INC.

CENTRAL PENNSYLVANIA REGION OFFICE:
3075 ENTERPRISE DRIVE
SUITE 100
STATE COLLEGE, PA 16801
PH: 814-231-8285
Fax: 814-237-2308

LANCASTER REGION OFFICE:
3904 B ABEL DRIVE
COLUMBIA, PA 17512
PH: 717-522-5031
Fax: 717-522-5046

WWW.PENNTERRA.COM

COPYRIGHT 2021 BY THE ENGINEER
THE INFORMATION CONTAINED HEREON MAY NOT BE USED OR COPIED IN ANY MANNER WITHOUT THE WRITTEN PERMISSION OF THE ENGINEER EXCEPT AS OTHERWISE PROVIDED BY APPROPRIATE LAWS OR STATUTES.
© PENNTERRA ENGINEERING 2021 ALL RIGHTS RESERVED

COMMONWEALTH OF PENNSYLVANIA
REGISTERED PROFESSIONAL
C. ANTHONY FRUCHTL
ENGINEER
PE-062413

Designer EAH
Draftsman EAH
Proj.Manager CAF
Surveyor BRK
Perimeter Ck.
Book 463 Pg 1
File 19286.01-DETAILS-2
Layout DETAILS

Date Description
REVISIONS

TOFTREES PLANNED COMMUNITY WEST MOUNT NITTANY HEALTH OUTPATIENT CENTER

PATTON TOWNSHIP
CENTRE COUNTY
PENNSYLVANIA

FINAL LAND DEVELOPMENT PLAN

LANDSCAPE AND LIGHTING DETAILS

PROJECT NO.
19286.01
DATE
NOVEMBER 5, 2021
SCALE
AS NOTED
SHEET NO.
23

P:\ddtproj\2019\19286\19286.01 - Phase 1\Design\plot files\final plans\19286.01-DETAILS-2.dwg, 11/5/2021 11:34:06 AM, 1:1

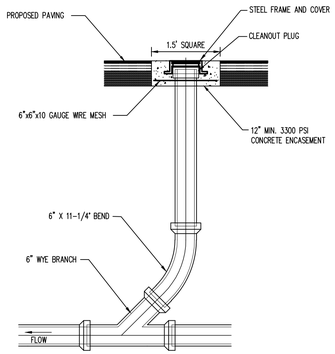

6" SANITARY SEWER CLEAN-OUT DETAIL

NOT TO SCALE

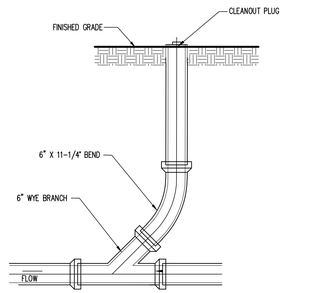

6" SANITARY SEWER CLEAN-OUT DETAIL (LAWN AREAS)

NOT TO SCALE

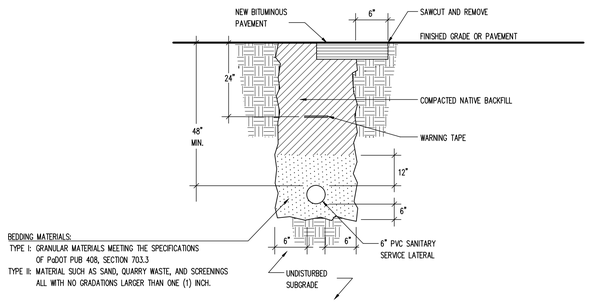

SANITARY LATERAL TRENCH DETAIL

NOT TO SCALE

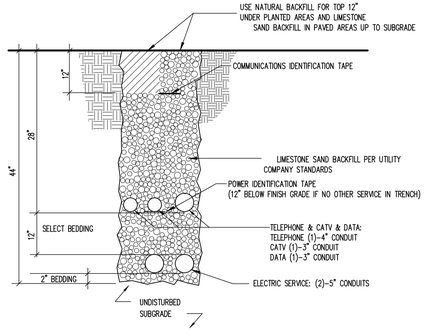

NOTES: 1. LIMESTONE SAND BACKFILL PER UTILITY COMPANY STANDARDS.
2. REFER TO UTILTIY COMPANY DESIGN PLANS FOR LOCATIONS AND SIZES OF PVC CONDUITS.
3. INSTALL CONDUIT FOR POWER, TELEPHONE, & CATV AS SHOWN ON UTILITY PROVIDER PLANS.

UTILITY TRENCH DETAIL

NOT TO SCALE

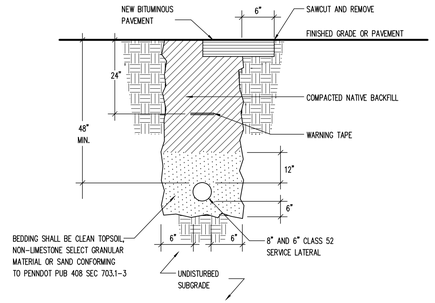

WATER LATERAL TRENCH DETAIL

NOT TO SCALE

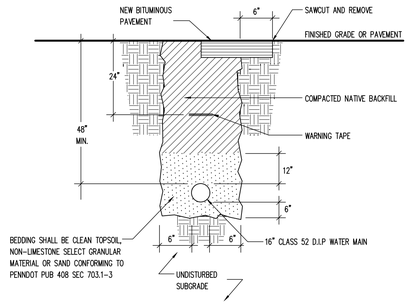

WATER MAIN TRENCH DETAIL

NOT TO SCALE

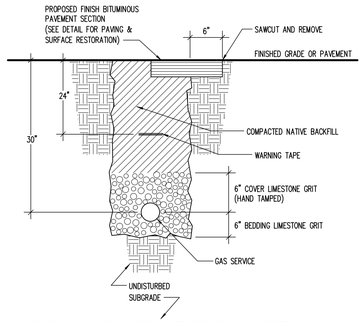

NATURAL GAS SERVICE TRENCH DETAIL

NOT TO SCALE

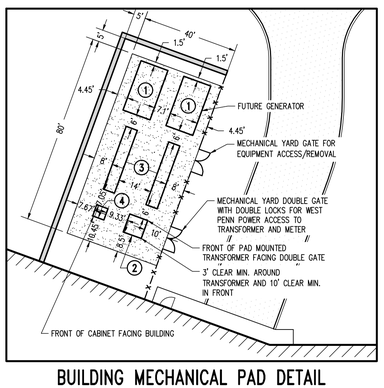

BUILDING MECHANICAL PAD DETAIL

SCALE: 1"=30'

EQUIPMENT LIST:
1. EMERGENCY GENERATOR ENCLOSURE (WALK-IN): 22'L x 12'W x 12'H
2. UTILITY TRANSFORMER: 8'L x 8'W 10' CLEAR IN FRONT, 4' MIN. CLEAR ON ALL OTHER SIDES, 15' CLEAR FROM DIESEL
3. AIR-COOLED CHILLER: 28'L x 5'W x 9'H 6.5' CLEAR FOR COIL PULLS, 3' CLEAR ALL OTHER SIDES
4. PORTABLE GENERATOR CONNECTION CABINET: 5'L x 5'W x 7.5'H

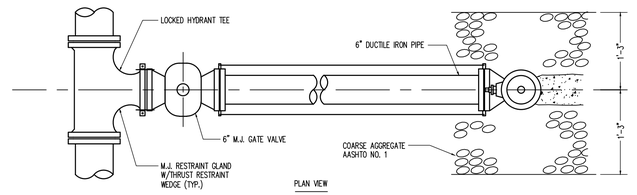

NOTE:
CONSTRUCTION & MATERIALS SHALL BE IN ACCORDANCE WITH "MATERIALS & INSTALLATION SPECIFICATIONS FOR PRIVATE DISTRIBUTION LINES, SERVICE LINES & FIRE HYDRANTS" BY THE STATE COLLEGE BOROUGH WATER AUTHORITY LATEST EDITION.

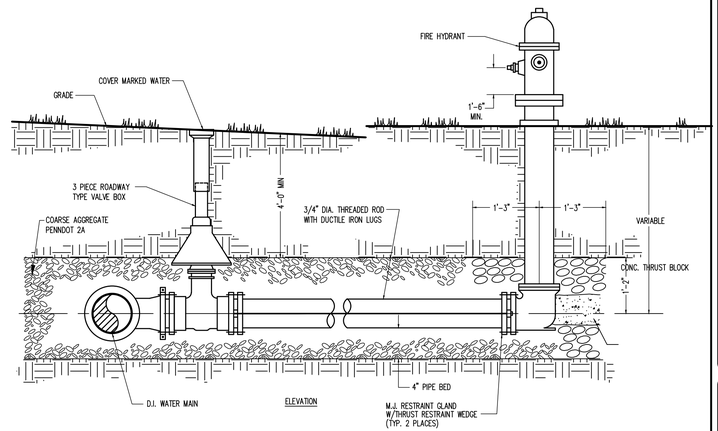

FIRE HYDRANT INSTALLATION DETAIL

NOT TO SCALE

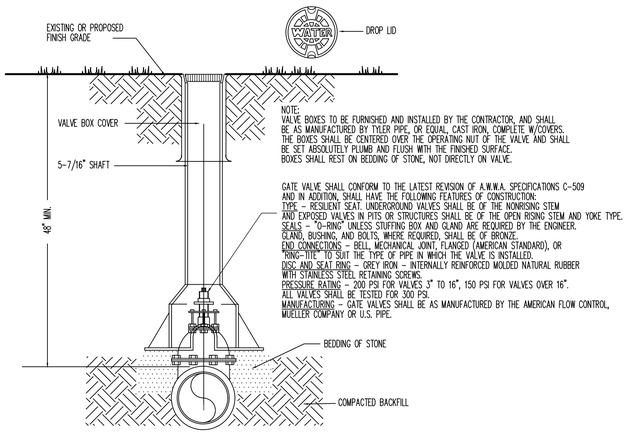

NOTE:
VALVE BOXES TO BE FURNISHED AND INSTALLED BY THE CONTRACTOR, AND SHALL BE AS MANUFACTURED BY TYLER PIPE, OR EQUAL. CAST IRON, COMPLETE W/COVERS. THE BOXES SHALL BE CENTERED OVER THE OPERATING NUT OF THE VALVE AND SHALL BE SET ABSOLUTELY PLUMB AND FLUSH WITH THE FINISHED SURFACE. BOXES SHALL REST ON BEDDING OF STONE, NOT DIRECTLY ON VALVE.

GATE VALVE SHALL CONFORM TO THE LATEST REVISION OF A.W.W.A. SPECIFICATIONS C-509 AND IN ADDITION, SHALL HAVE THE FOLLOWING FEATURES OF CONSTRUCTION:
TYPE – RESILIENT SEAT UNDERGROUND VALVES SHALL BE OF THE NONRISING STEM AND EXPOSED VALVES IN PITS OR STRUCTURES SHALL BE OF THE OPEN RISING STEM AND YOKE TYPE.
SEALS – "O-RING" UNLESS STUFFING BOX AND GLAND ARE REQUIRED BY THE ENGINEER.
GLAND, BUSHING, AND BOLTS, WHERE REQUIRED, SHALL BE OF BRONZE.
END CONNECTIONS – BELL, MECHANICAL JOINT, FLANGED (AMERICAN STANDARD), OR "RING-TITE" TO SUIT THE TYPE OF PIPE IN WHICH THE VALVE IS INSTALLED.
DISC AND SEAT RING – GREY IRON – INTERNALLY REINFORCED MOLDED NATURAL RUBBER WITH STAINLESS STEEL RETAINING SCREWS.
PRESSURE RATING – 200 PSI FOR VALVES 3" TO 16", 150 PSI FOR VALVES OVER 16".
ALL VALVES SHALL BE TESTED FOR 300 PSI.
MANUFACTURING – GATE VALVES SHALL BE AS MANUFACTURED BY THE AMERICAN FLOW CONTROL, MUELLER COMPANY OR U.S. PIPE.

TYPICAL GATE VALVE INSTALLATION

NOT TO SCALE

PennTerra ENGINEERING INC.
CENTRAL PENNSYLVANIA REGION OFFICE:
3075 ENTERPRISE DRIVE
SUITE 100
STATE COLLEGE, PA 16801
PH: 814-231-8285
Fax: 814-237-2308
LANCASTER REGION OFFICE:
3904 B ABEL DRIVE
COLUMBIA, PA 17512
PH: 717-522-5031
Fax: 717-522-5046
WWW.PENNTERRA.COM

COPYRIGHT 2021 BY THE ENGINEER
THE INFORMATION CONTAINED HEREON MAY NOT BE USED OR COPIED IN ANY MANNER WITHOUT THE WRITTEN PERMISSION OF THE ENGINEER EXCEPT AS OTHERWISE PROVIDED BY APPROPRIATE LAWS OR STATUTES.
© PENNTERRA ENGINEERING 2021 ALL RIGHTS RESERVED

COMMONWEALTH OF PENNSYLVANIA REGISTERED PROFESSIONAL C. ANTHONY FRUCHTL ENGINEER PE-062413

Designer	EAH
Draftsman	EAH
Proj.Manager	CAF
Surveyor	BRK
Perimeter Ck.	
Book	463 Pg 1
File	19286.01-DETAILS-3
Layout	DETAILS

Date	Description

REVISIONS

TOFTREES PLANNED COMMUNITY WEST MOUNT NITTANY HEALTH OUTPATIENT CENTER

PATTON TOWNSHIP
CENTRE COUNTY
PENNSYLVANIA

FINAL LAND DEVELOPMENT PLAN

UTILITY DETAILS

PROJECT NO.	
19286.01	
DATE	
NOVEMBER 5, 2021	
SCALE	SHEET NO.
AS NOTED	24

P:\ddtproj\2019\19286\19286.01 - Phase 1\Design\plot files\final plans\19286.01-DETAILS-3.dwg, 11/5/2021 11:34:32 AM, 1:1

ZURN Model 375
Reduced Pressure Principle Assembly



LEAD FREE

NSF/ANSI 61

Application
Designed for installation on potable water lines to protect against both backsiphonage and backpressure of contaminated water into the potable water supply. The Model 375 provides protection where a potential health hazard exists. Ideal for use where lead-free* valves are required.

Standards Compliance
(Unless Otherwise Noted, Sizes 2 1/2" Thru 10")
- ASSE® Listed 1013
- IAPMO® Listed
- CSA® Certified B64.4 (2 1/2" thru 8")
- AWWA Compliant C511, and C550
- FM® Approved
- UL® Classified
- C-UL® Classified
- NYC MEA 49-01-M Vol 2
- Approved by the Foundation for Cross Connection Control and Hydraulic Research at the University of Southern California.
- Meets the requirements of NSF/ANSI 61*

*(0.25% MAX. WEIGHTED AVERAGE LEAD CONTENT)

Materials

Main valve body	Ductile Iron ASTM A 536
Access covers	Ductile Iron ASTM A 536
Coatings	NSF Approved fusion epoxy finish
Internals	Stainless steel, 300 Series NORYL™
Fasteners	Stainless Steel, 300 Series
Seal rings	EPDM (FDA approved)
O-rings	Buna Nitrile (FDA approved)
Springs	Stainless Steel, 300 Series
Sensing line	Stainless Steel, braided hose

Features
Sizes: 2 1/2", 3", 4", 6", 8", 10"

Maximum working water pressure	175 PSI
Maximum working water temperature	140°F
Hydrostatic test pressure	350 PSI
End connections (Grooved for steel pipe) (Flanged)	AWWA C606 ANSI B16.1 Class 125

Options
(Suffixes can be combined)
- ☐ - with NRS shut-off valves (standard)
- ☐ FSC - with epoxy coated wye type strainer (flanged only)
- ☐ G - with grooved end NRS gate valves
- ☐ GF - with grooved inlet connection and flanged outlet connection
- ☐ FG - with flanged inlet connection and grooved outlet connection
- ☐ L - less shut-off valves (flanged body connections)
- ☐ MS - with Integral Relief Valve Monitor Switch
- ☐ OSY - with OS&Y gate valves
- ☐ PI - with Post Indicator gate valve
- ☐ BG - with grooved end butterfly valves with integral supervisory switches
- ☐ –509 - with AWWA C509 gate valves

Accessories
- ☐ Repair kit (rubber only)
- ☐ Thermal expansion tank (Model XT)
- ☐ OS & Y Gate valve tamper switch (OSY-40)
- ☐ Air gap (Model AG)
- ☐ Electronic Solenoid Timer (Model EST)
- ☐ QT-SET Quick Test Fitting Set

Relief Valve discharge port:
2 1/2" - 6" - 2.75 sq. in.
8" - 10" - 3.69 sq. in.

Attention:
Model 375 (flange body) and Model 375A (grooved body) have different lay lengths.

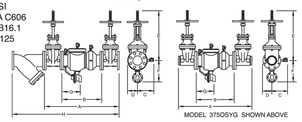

MODEL 375OSYG SHOWN ABOVE

Dimensions & Weights (do not include pkg.)

MODEL 375 SIZE	DIMENSION (approximate) A	A WITH BUTTERFLY VALVES	B LESS GATE VALVES	C	D	E OS&Y OPEN	E OS&Y CLOSED	E NRS GATE	E WITH BUTTERFLY VALVES	F	G	H	WEIGHT LESS SHUT-OFF VALVES	NRS GATE VALVES FLANGED	NRS GATE VALVES GROOVED	OS&Y GATE VALVES FLANGED	OS&Y GATE VALVES GROOVED	BUTTERFLY VALVES GROOVED
in. / mm	in. / mm	in. / mm	in. / mm	in. / mm	in. / mm	in. / mm	in. / mm	in. / mm	in. / mm	in. / mm	in. / mm	in. / mm	lbs. / kg	lbs. / kg	lbs. / kg	lbs. / kg	lbs. / kg	lbs. / kg
2 1/2 / 65	20 / 787	29 / 711	15 7/8 / 403	7 1/4 / 184	3 3/4 / 95	17 3/4 / 451	15 3/8 / 391	13 3/4 / 349	13 3/4 / 349	3 1/2 / 89	8 1/4 / 210	9 1/2 / 241	8 3/8 / 213	41 1/4 / 1048	60 / 27	62 / 28	73 / 33	77 / 35
3 / 80	22 / 813	28 1/2 / 724	15 7/8 / 403	7 3/4 / 197	3 3/4 / 95	20 1/4 / 514	17 / 432	13 3/4 / 349	13 3/4 / 349	3 1/2 / 89	8 1/4 / 210	9 1/2 / 241	8 3/8 / 213	41 1/4 / 1048	60 / 27	62 / 28	73 / 33	77 / 35
4	24 / 900	37 5/8 / 956	18 5/8 / 473	8 1/2 / 216	4 1/2 / 114	22 1/2 / 572	18 1/4 / 464	14 1/2 / 368	9	228	11	272	9 1/4 / 235	52 3/4 / 1340	85 / 38	84 / 38	105 / 48	109 / 49
6	30 / 1150	37 5/8 / 956	32 5/8 / 829	10 1/2 / 267	5 / 127	26 1/2 / 673	22 1/2 / 572	18 1/4 / 464	14 1/2 / 368	9	228	11	272	9 1/4 / 235	52 3/4 / 1340	85 / 38	84 / 38	105 / 48	109 / 49
8	36 / 1400	44 5/8 / 1133	37 5/8 / 956	12 1/2 / 318	6 / 152	30 1/2 / 775	24 1/4 / 616	18 / 457	15 1/4 / 387	10 / 254	13 / 330	15 3/8 / 391	13 3/4 / 349	3 1/2 / 89	68 / 31	178 / 81	160 / 73	140 / 64	134 / 61
10	42 / 1650	53 7/8 / 1368	37 5/8 / 956	14 1/2 / 368	7 / 178	34 1/2 / 876	28 1/2 / 724	18 1/4 / 464	15 1/4 / 387	10 / 254	13 / 330	15 3/8 / 391	13 3/4 / 349	3 1/2 / 89	68 / 31	198 / 90	150 / 68	120 / 54	134 / 61

Zurn Industries, LLC | Wilkins
1747 Commerce Way, Paso Robles, CA U.S.A. 93446 Ph. 855-663-9876, Fax 805-238-5766
In Canada | **Zurn Industries Limited**
7900 Goreway Drive, Unit 10, Brampton, Ontario L6T 5W6, 877-892-5216
www.zurn.com

Rev. H
Date: 12/19
Document No. BF-375
Patent No. 5, 913, 331
Product No. Model 375

Flow Characteristics
◇ Rated Flow (established by approval agencies)

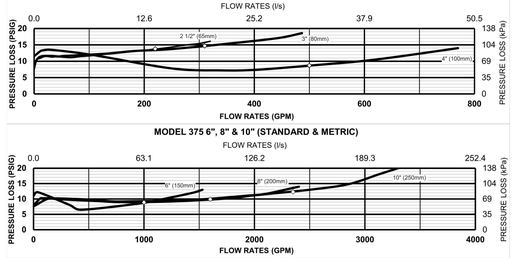

Typical Installation
Local codes shall govern installation requirements. Unless otherwise specified, the assembly shall be mounted at a minimum of 12" (305mm) and a maximum of 30" (762mm) above adequate drains with sufficient side clearance for testing and maintenance. The installation shall be made so that no part of the unit can be submerged.

Capacity thru Schedule 40 Pipe (GPM)				
Pipe size	5 ft/sec	7.5 ft/sec	10 ft/sec	15 ft/sec
2 1/2"	75	112	149	224
3"	115	173	230	346
4"	198	298	397	595
6"	450	675	900	1351
8"	780	1169	1559	2339
10"	1229	1843	2458	3687
12"	1763	2644	3525	5288

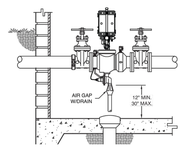

INDOOR INSTALLATION (375GF)

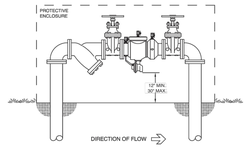

OUTDOOR INSTALLATION

Specifications
The Reduced Pressure Principle Backflow Prevention Assembly shall be certified to NSF/ANSI 61, ASSE® Listed 1013, and supplied with full port gate valves. The main body and access cover shall be epoxy coated ductile iron (ASTM A 536), the seat ring and check valve shall be NORYL™, the stem shall be stainless steel (ASTM A 276) and the seat disc elastomers shall be EPDM. The checks and the relief valve shall be accessible for maintenance without removing the device from the line. The Reduced Pressure Principle Backflow Prevention Assembly shall be a ZURN WILKINS Model 375.

Zurn Industries, LLC | Wilkins
1747 Commerce Way, Paso Robles, CA U.S.A. 93446 Ph. 855-663-9876, Fax 805-238-5766
In Canada | **Zurn Industries Limited**
7900 Goreway Drive, Unit 10, Brampton, Ontario L6T 5W6, 877-892-5216
www.zurn.com

ZURN Model 350DA
Double Check Detector Assembly



LEAD FREE

NSF/ANSI 61

Application
Designed for installation on water lines in fire protection systems to protect against both backsiphonage and backpressure of polluted water into the potable water supply. Model 350DA shall provide protection where a potential health hazard does not exist. Incorporates metered by-pass to detect leaks and unauthorized water use.

Standards Compliance
(Sizes 2 1/2" - 10" Horiz. & Vert.)
(12" Horizontal Only)
- ASSE® Listed 1048 (Sizes 2 1/2" thru 12")
- CSA® Certified B64.5 (Sizes 2 1/2" thru 8", & 12")
- AWWA Compliant C510 (Sizes 2 1/2" thru 12"), and C550
- UL® Classified (Sizes 2 1/2" thru 12")
- C-UL® Classified (Sizes 2 1/2" thru 12")
- FM® Approved (Sizes 2 1/2" thru 10")
- NYC MEA 147-99-M Vol 4 (2-1/2" - 10)
- Approved by the Foundation for Cross Connection Control and Hydraulic Research at the University of Southern California (Sizes 2 1/2" thru 12")
- Meets the requirements of NSF/ANSI 61*

*(0.25% MAX. WEIGHTED AVERAGE LEAD CONTENT)

By-Pass Backflow Assembly 3/4" Model 950XLD

Materials

Main valve body	Ductile Iron ASTM A 536
Access covers	Ductile Iron ASTM A 536
Coatings	NSF Approved fusion epoxy finish
Internals	Stainless steel, 300 Series NORYL™
Fasteners	Stainless Steel, 300 Series
Elastomers	EPDM (FDA approved) Buna Nitrile (FDA approved)
Polymers	NORYL™
Springs	Stainless Steel, 300 Series

Features
Sizes: 2 1/2", 3", 4", 6", 8", 10", 12"

Maximum working water pressure	175 PSI
Maximum working water temperature	140°F
Hydrostatic test pressure	350 PSI
End connections (Grooved for steel) (Flanged bolt pattern)	AWWA C606 ASME B16.42 Class 150

Options
(Suffixes can be combined)
- ☐ - with OS & Y gate valves (standard)
- ☐ L - less shut-off valves (flanged body connections)
- ☐ LM - less water meter
- ☐ RM - with remote reading meter
- ☐ - with gallon meter (standard)
- ☐ CFM - with cu ft meter
- ☐ CMM - with cu meter meter
- ☐ G - with groove end gate valves
- ☐ FG - with flanged inlet connection and grooved outlet connection
- ☐ PI - with Post Indicator Gate Valve
- ☐ GF - with flanged inlet connection and grooved outlet connection
- ☐ BG - with grooved end butterfly valves with integral monitor switches (2 1/2" - 10"

Accessories
- ☐ Repair kit (rubber only)
- ☐ Thermal expansion tank (Model XT)
- ☐ OS & Y Gate valve tamper switch (OSY-40)

Attention:
Model 350DA (flange body) and Model 350ADA (grooved body) have different lay lengths.

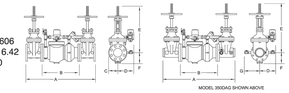

MODEL 350DAG SHOWN ABOVE

Dimensions & Weights (do not include pkg.)

MODEL 350DA SIZE	DIMENSION (approximate) A	A WITH BUTTERFLY VALVES	B LESS GATE VALVES	C	D	E OS&Y OPEN	E OS&Y CLOSED	E WITH BUTTERFLY VALVES	F	WEIGHT LESS SHUTOFF VALVES	OS&Y GATE VALVES FLANGED	OS&Y GATE VALVES GROOVED	BUTTERFLY VALVES GROOVED
in. / mm	in. / mm	in. / mm	in. / mm	in. / mm	in. / mm	in. / mm	in. / mm	in. / mm	in. / mm	lbs. / kg	lbs. / kg	lbs. / kg	lbs. / kg
2 1/2 / 65	31 / 787	28 / 711	15 7/8 / 403	3 3/4 / 95	9 / 229	17 3/4 / 451	15 3/8 / 391	13 3/4 / 349	3 1/2 / 89	68 / 31	178 / 81	160 / 73	140 / 64
3 / 80	32 / 813	28 1/2 / 724	15 7/8 / 403	3 3/4 / 95	9 / 229	20 1/4 / 514	17 / 432	13 3/4 / 349	3 1/2 / 89	68 / 31	198 / 90	150 / 68	120 / 54
4	35 / 900	37 5/8 / 956	18 5/8 / 473	4 1/2 / 114	9 / 229	22 1/2 / 572	18 1/4 / 464	14 1/2 / 368	9 / 228	178 / 81	160 / 73	140 / 64	134 / 61
6	44 5/8 / 1133	37 5/8 / 956	23 1/2 / 597	6 / 152	10 1/2 / 267	30 1/2 / 775	24 1/4 / 616	18 / 457	10 / 254	198 / 90	150 / 68	120 / 54	134 / 61
8	50 7/8 / 1546	37 7/8 / 1368	37 3/4 / 959	10 / 254	12 / 305	37 / 940	28 1/2 / 724	16 15/16 / 430	8 1/2 / 216	374 / 170	350 / 386	805 / 364	548 / 248
10	63 7/8 / 1622	57 7/8 / 1470	37 3/4 / 959	10 / 254	12 / 305	45 5/8 / 1159	34 3/4 / 883	16 15/16 / 430	8 1/2 / 216	404 / 183	1222 / 554	1156 / 524	792 / 359
12	300 / 66 3/16 / 1681	n/a	38 / 965	10 / 254	12 / 305	53 / 1346	40 1/2 / 1029	n/a	8 7/8 / 226	463 / 210	1623 / 736	n/a	n/a

Zurn Industries, LLC | Wilkins
1747 Commerce Way, Paso Robles, CA U.S.A. 93446 Ph. 855-663-9876, Fax 805-238-5766
In Canada | **Zurn Industries Limited**
7900 Goreway Drive, Unit 10, Brampton, Ontario L6T 5W6, 877-892-5216
www.zurn.com

Rev. L
Date: 01/20
Document No. BF-350DA
Patent No. 5, 913, 331
Product No. Model 350DA

Flow Characteristics
◇ Rated Flow (established by approval agencies)

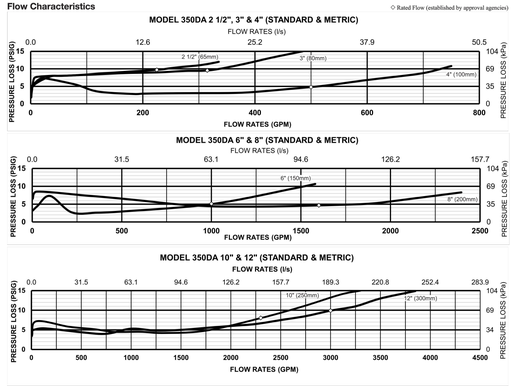

Typical Installation
Local codes shall govern installation requirements. Unless otherwise specified, the assembly shall be mounted at a minimum of 12" (305mm) and a maximum of 30" (762mm) above adequate drains with sufficient side clearance for testing and maintenance. The installation shall be made so that no part of the unit can be submerged.

Capacity thru Schedule 40 Pipe (GPM)				
Pipe size	5 ft/sec	7.5 ft/sec	10 ft/sec	15 ft/sec
2 1/2"	75	112	149	224
3"	115	173	230	346
4"	198	298	397	595
6"	450	675	900	1351
8"	780	1169	1559	2339
10"	1229	1843	2458	3687
12"	1763	2644	3525	5288

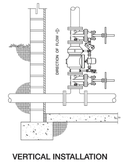

VERTICAL INSTALLATION

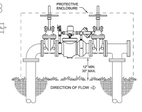

OUTDOOR INSTALLATION

Specifications
The Double Check Detector Backflow Prevention Assembly shall be certified to NSF/ANSI 61, ASSE® Listed 1048, and supplied with full port gate valves. The main body and access cover shall be epoxy coated ductile iron (ASTM A 536), the seat ring and check valve shall be Noryl™, the stem shall be stainless steel (ASTM A 276) and the seat disc elastomers shall be EPDM. The first and second check valves shall be accessible for maintenance without removing the device from the line. The Double Check Detector Backflow Prevention Assembly shall be a ZURN WILKINS Model 350DA.

Zurn Industries, LLC | Wilkins
1747 Commerce Way, Paso Robles, CA U.S.A. 93446 Ph. 855-663-9876, Fax 805-238-5766
In Canada | **Zurn Industries Limited**
7900 Goreway Drive, Unit 10, Brampton, Ontario L6T 5W6, 877-892-5216
www.zurn.com

ENCLOSURE MODEL: 400-AL
JOB:
DRAWN BY: JM | SCALE: NONE | DATE: 06/06/16

SAFE-T-COVER
"ENCLOSURES DESIGNED FOR THE WORLDS WATER SYSTEMS"
WEBSITE: SAFE-T-COVER.COM
EMAIL: SALES@SAFE-T-COVER.COM
PHONE: (866) 288-6333
FAX: (866) 288-6334

ELEVATION VIEW

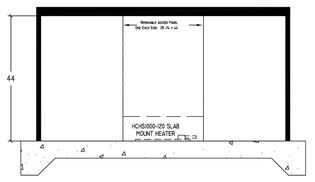

PLAN VIEW

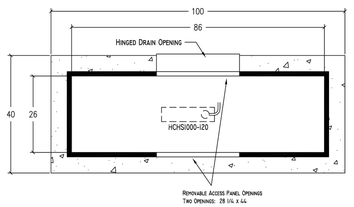

1. DRAWING NOT TO SCALE.
2. ALL DIMENSIONS ARE IN INCHES.
3. WALL AND INSULATION THICKNESS IS 1 1/4".
4. ROOF AND INSULATION THICKNESS IS 3".
5. MODEL 400-AL ENCLOSURE
6. EXTERIOR SHELL DIMENSIONS
   40" X 26" X 54" HIGH
7. CONCRETE PAD IS 42"W X 100"L X 6"H

CONFIDENTIAL: THIS DRAWING IS INTENDED FOR USE ONLY BY THOSE AUTHORIZED TO RECEIVE IT.
DISSEMINATION, DISTRIBUTION OR COPY OF THIS INFORMATION IS STRICTLY PROHIBITED. US PATENT 5,609,784

400-AL
SHEET 1 OF 1

SWL SERIES
Swing Check Valve
Swing Check Valve
"SWL" Series Dimensions
(both LW—Lever and Weight and LS—Lever and Spring)

SIZE	MODEL #	A	B	ØC	D	ØE	F	G	ØH	J	ØL	M x ØN	WT (lb)
3	SWL31-LW	9.50	.75	7.50	8.20	7.31	12.00	6.80	.75	3.00	6.00	4 x .75	68
4	SWL41-LW	11.50	.94	9.00	9.00	8.06	12.00	7.23	.87	3.75	7.50	8 x .75	98
6	SWL61-LW	14.00	1.00	11.00	10.54	11.42	18.00	9.29	1.00	4.02	9.50	8 x .88	188
8	SWL81-LW	19.50	1.12	13.50	12.50	13.19	18.00	11.10	1.25	5.75	11.75	8 x .88	317
10	SWL101-LW	24.50	1.19	16.00	14.94	16.50	18.00	13.20	1.25	7.25	14.25	12 x 1.00	500
12	SWL121-LW	27.50	1.25	19.00	16.63	18.25	18.00	14.41	1.50	7.75	17.00	12 x 1.00	670
14	SWL141-LW	31.00	1.38	21.00	18.94	21.50	24.75	16.90	2.00	8.50	18.75	12 x 1.12	1000
16	SWL161-LW	36.00	1.44	23.50	21.83	24.50	24.75	18.41	2.00	10.00	21.25	16 x 1.12	1328
18	SWL181-LW	40.00	1.56	25.00	22.80	27.25	30.75	20.91	2.00	11.00	22.75	16 x 1.25	1888
20	SWL201-LW	40.00	1.69	27.50	24.82	29.25	30.75	22.91	2.00	10.00	25.00	20 x 1.25	2200
24	SWL241-LW	48.00	1.88	32.00	28.88	33.50	36.68	26.22	2.75	12.00	29.50	20 x 1.38	3519
30	SWL301-LW	60.00	2.18	38.75	35.63	41.75	37.06	31.91	3.12	15.00	36.00	28 x 1.38	6248
36	SWL361-LW	63.00	2.44	46.00	40.31	48.50	44.00	37.41	3.50	13.50	42.75	32 x 1.62	9135

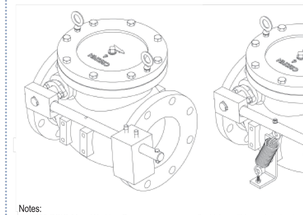

Notes:
1. 250 PSIG Max. Working Pressure
2. 500 PSIG Hydrostatic Shell Test Pressure
3. Valve will be painted externally with phenolic alkyd primer.

4

SWL Crispin Valve, 600 Fowler Ave., Berwick, PA 18603 • 1-800-AIR-VALV • T: (570) 752-4524 • F: (570) 752-4962 • WWW.CRISPINVALVE.COM • info@crispinvalve.com

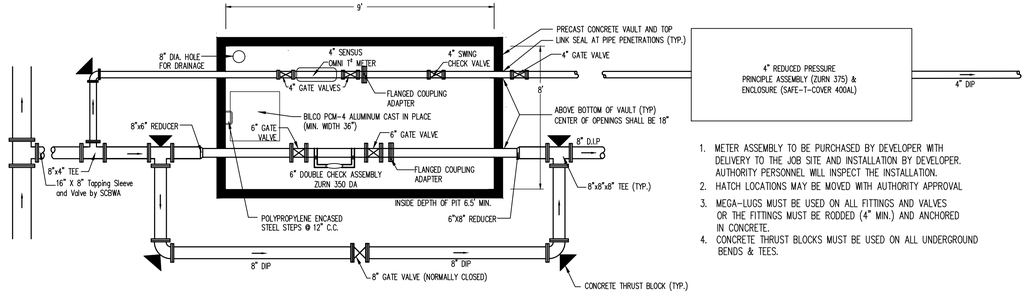

1. METER ASSEMBLY TO BE PURCHASED BY DEVELOPER WITH DELIVERY TO THE JOB SITE AND INSTALLATION BY DEVELOPER. AUTHORITY PERSONNEL WILL INSPECT THE INSTALLATION.
2. HATCH LOCATIONS MAY BE MOVED WITH AUTHORITY APPROVAL
3. MEGA-LUGS MUST BE USED ON ALL FITTINGS AND VALVES OR THE FITTINGS MUST BE RODDED (4" MIN.) AND ANCHORED IN CONCRETE.
4. CONCRETE THRUST BLOCKS MUST BE USED ON ALL UNDERGROUND BENDS & TEES.

METER PIT FOR 4" DOMESTIC W/4" COMPOUND METER & 8" FIRE LINE
PLAN VIEW
NOT TO SCALE

PennTerra ENGINEERING INC.
CENTRAL PENNSYLVANIA REGION OFFICE:
3075 ENTERPRISE DRIVE
SUITE 100
STATE COLLEGE, PA 16801
PH: 814-231-8285
Fax: 814-237-2308

LANCASTER REGION OFFICE:
3904 B ABEL DRIVE
COLUMBIA, PA 17512
PH: 717-522-5031
Fax: 717-522-5046

WWW.PENNTERRA.COM

COPYRIGHT 2021 BY THE ENGINEER
THE INFORMATION CONTAINED HEREON MAY NOT BE USED OR COPIED IN ANY MANNER WITHOUT THE WRITTEN PERMISSION OF THE ENGINEER EXCEPT AS OTHERWISE PROVIDED BY APPROPRIATE LAWS OR STATUTES.
© PENNTERRA ENGINEERING 2021 ALL RIGHTS RESERVED

COMMONWEALTH OF PENNSYLVANIA
REGISTERED PROFESSIONAL
C. ANTHONY FRUCHTL
ENGINEER
PE-062413

Designer EAH
Draftsman EAH
Proj.Manager CAF
Surveyor BRK
Perimeter Ck.
Book 463 Pg 1
File 19286.01-DETAILS-4
Layout DETAILS

. . .
. . .
. . .
. . .
. . .
. . .
. . .
Date Description
REVISIONS

TOFTREES PLANNED COMMUNITY WEST MOUNT NITTANY HEALTH OUTPATIENT CENTER

PATTON TOWNSHIP
CENTRE COUNTY
PENNSYLVANIA

FINAL LAND DEVELOPMENT PLAN

UTILITY DETAILS

PROJECT NO.
19286.01
DATE
NOVEMBER 5, 2021
SCALE
AS NOTED
SHEET NO.
25

P:\ddtpnp\2019\19286\19286.01 - Phase 1\Design\plot files\final plans\19286.01-DETAILS-4.dwg, 11/5/2021 11:34:42 AM, 1:1

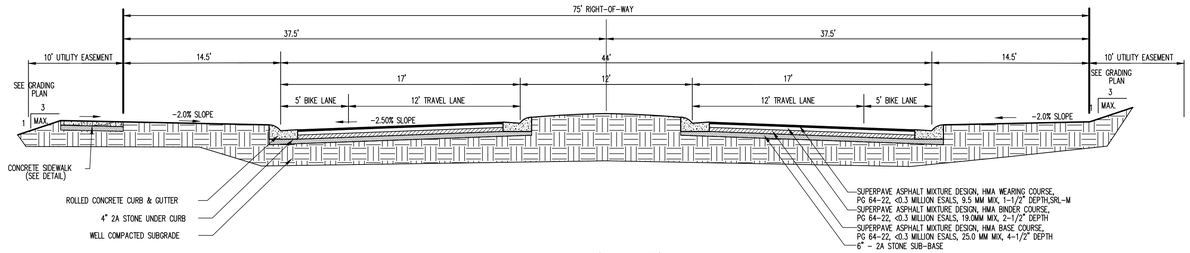

NOTE: TOTAL SLOPE OF ROAD (CROWN TO GUTTER) = 2.86%

MASTERS BOULEVARD – TYPICAL BOULEVARD CROSS-SECTION

NOT TO SCALE

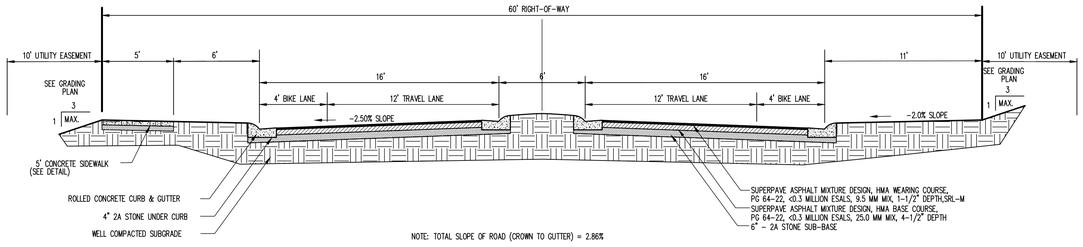

NOTE: TOTAL SLOPE OF ROAD (CROWN TO GUTTER) = 2.86%

ROYAL QUEEN'S MAIN – TYPICAL BOULEVARD CROSS-SECTION

NOT TO SCALE

PennTerra ENGINEERING INC.

CENTRAL PENNSYLVANIA REGION OFFICE:
3075 ENTERPRISE DRIVE
SUITE 100
STATE COLLEGE, PA 16801
PH: 814-231-8285
Fax: 814-237-2308

LANCASTER REGION OFFICE:
3904 B ABEL DRIVE
COLUMBIA, PA 17512
PH: 717-522-5031
Fax: 717-522-5046

WWW.PENNTERRA.COM

COPYRIGHT 2021 BY THE ENGINEER
THE INFORMATION CONTAINED HEREON MAY NOT BE USED OR COPIED IN ANY MANNER WITHOUT THE WRITTEN PERMISSION OF THE ENGINEER EXCEPT AS OTHERWISE PROVIDED BY APPROPRIATE LAWS OR STATUTES.
© PENNTERRA ENGINEERING 2021 ALL RIGHTS RESERVED

COMMONWEALTH OF PENNSYLVANIA
REGISTERED PROFESSIONAL
C. ANTHONY FRUCHTL
ENGINEER
PE-062413

Designer EAH
Draftsman EAH
Proj.Manager CAF
Surveyor BRK
Perimeter Ck.
Book 463 Pg 1
File 19286.01-DETAILS-5
Layout DETAILS

Date Description
REVISIONS

TOFTREES PLANNED COMMUNITY WEST MOUNT NITTANY HEALTH OUTPATIENT CENTER

PATTON TOWNSHIP
CENTRE COUNTY
PENNSYLVANIA

FINAL LAND DEVELOPMENT PLAN

ROAD CROSS SECTIONS

PROJECT NO.
19286.01

DATE
NOVEMBER 5, 2021

SCALE
AS NOTED

SHEET NO.
26

P:\ldtdprog\2019\19286\19286.01 - Phase 1\Design\plot files\final plans\19286.01-DETAILS-5.dwg, 11/5/2021 11:34:51 AM, 1:1

USGS MAP
SCALE: 1"=2000'

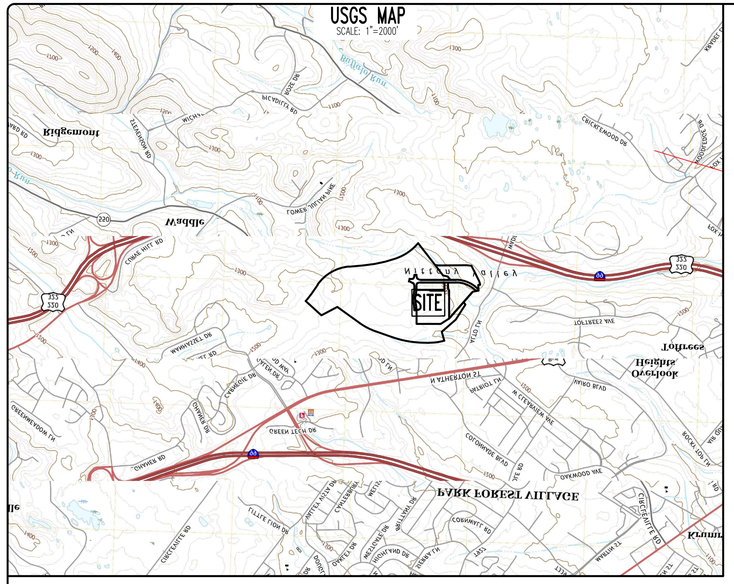
SITE
PARK FOREST AVENUE
Whitehall Road
Nittany Valley
Mountain
Valley
Overlook
Heights
Village
Middle
Park
Forest
Klinger
Lincoln
Cemetery
Meadow
Lane
Circle
Drive
Court
Terrace
Road
Avenue
Boulevard
Place
Lane
Way
Trail
Crossing
Square
Hill
Ridge
Valley
Creek
Run
Spring
Mill
Bridge
Church
School
Hospital
Park
Golf
Course
Trailer
Park
Cemetery
Airport
Station
Post
Office
Library
Museum
Theater
Hotel
Motel
Restaurant
Store
Shopping
Center
Mall
Bank
Gas
Station
Parking
Lot
Garage
Tower
Water
Tank
Reservoir
Dam
Lake
Pond
Stream
River
Creek
Run
Spring
Well
Pump
Station
Substation
Transformer
Power
Line
Pipeline
Railroad
Bridge
Tunnel
Overpass
Underpass
Interchange
Exit
Entrance
Ramp
Loop
Cloverleaf
Diamond
Interchange
Toll
Booth
Weigh
Station
Rest
Area
Scenic
Overlook
Historic
Site
Monument
Marker
Plaque
Statue
Fountain
Garden
Arboretum
Zoo
Aquarium
Stadium
Arena
Gymnasium
Swimming
Pool
Tennis
Court
Basketball
Court
Baseball
Field
Soccer
Field
Football
Field
Track
Field
Playground
Picnic
Area
Campground
Trailhead
Bike
Path
Jogging
Trail
Nature
Trail
Boardwalk
Observation
Deck
Lookout
Tower
Fire
Tower
Lighthouse
Beacon
Buoy
Channel
Harbor
Marina
Dock
Pier
Wharf
Boat
Ramp
Launch
Ramp
Fishing
Pier
Swimming
Beach
Lifeguard
Stand
Restroom
Shower
Drinking
Fountain
Water
Fountain
Trash
Can
Recycling
Bin
Dumpster
Compost
Bin
Bench
Table
Chair
Umbrella
Shade
Structure
Gazebo
Pavilion
Shelter
Grill
Fire
Pit
Campfire
Ring
Tent
Site
RV
Site
Cabin
Lodge
Inn
Bed
and
Breakfast
Hostel
Resort
Spa
Golf
Course
Clubhouse
Pro
Shop
Driving
Range
Putting
Green
Sand
Trap
Water
Hazard
Fairway
Rough
Green
Tee
Box
Hole
Flag
Pin
Cup
Ball
Washer
Golf
Cart
Path
Golf
Cart
Rental
Golf
Club
Rental
Golf
Ball
Rental
Golf
Lesson
Golf
Tournament
Golf
League
Golf
Membership
Golf
Course
Map
Golf
Course
Rules
Golf
Course
Etiquette
Golf
Course
Safety
Golf
Course
Maintenance
Golf
Course
Irrigation
Golf
Course
Drainage
Golf
Course
Erosion
Control
Golf
Course
Sedimentation
Control
Golf
Course
Stormwater
Management
Golf
Course
Post
Construction
Stormwater
Management
Golf
Course
Final
Land
Development
Plan
Golf
Course
Overall
Plan
Golf
Course
Panel
1
Golf
Course
Panel
2
Golf
Course
Panel
3
Golf
Course
Panel
4
Golf
Course
Panel
5
Golf
Course
Panel
6
Golf
Course
Panel
7
Golf
Course
Panel
8
Golf
Course
Panel
9
Golf
Course
Panel
10
Golf
Course
Panel

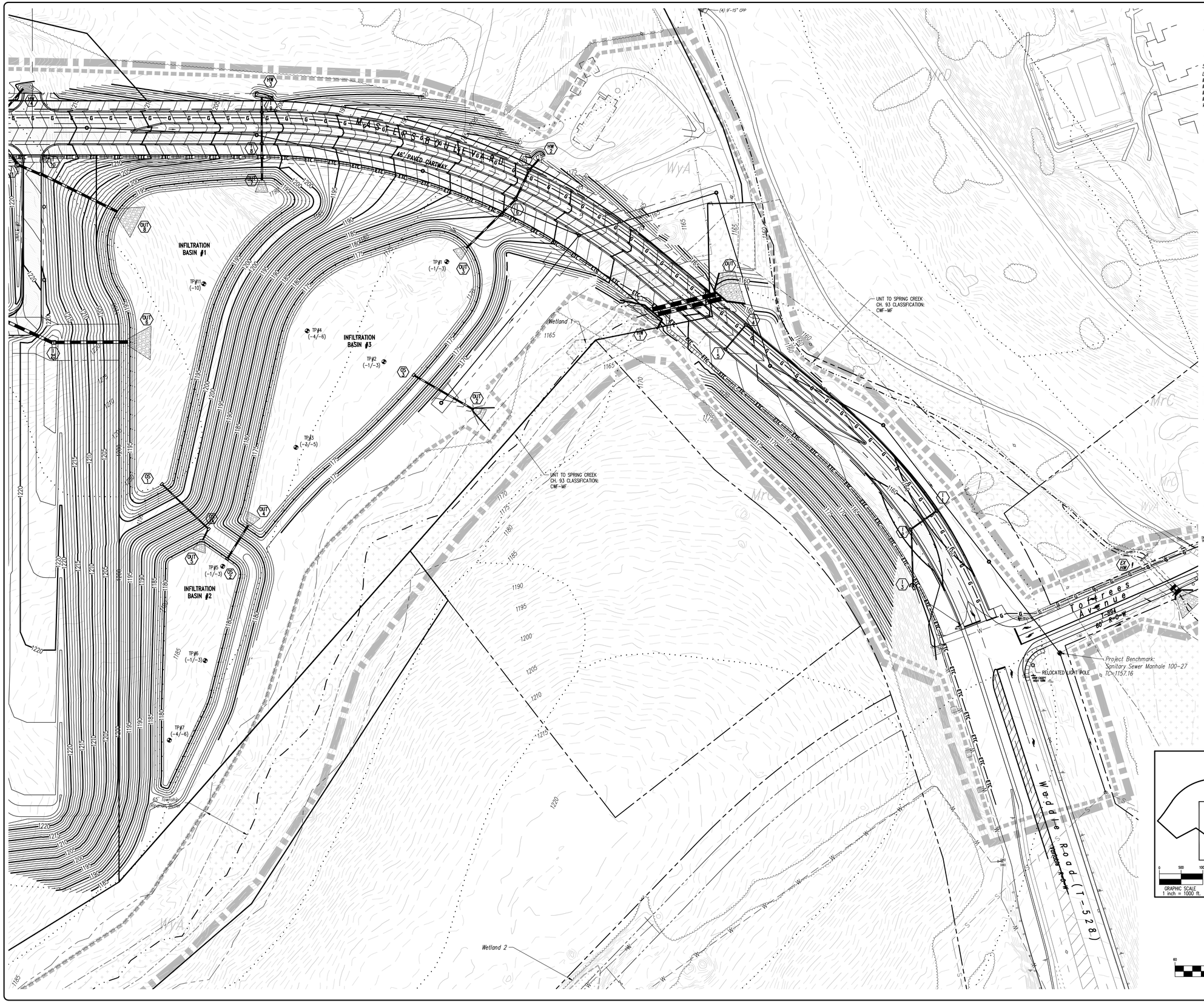

SURVEY FEATURES LEGEND

- Property Line, Lot Line or Right of Way Line
- Adjoining Property Line

SOILS LEGEND

Soil cover on the site consists of:

- LaB – Leetonia sand, variant 3%-8% Slopes
- MrB – Morrison sandy loam, 2%-8% Slopes
- MrC – Morrison sandy loam, 8%-15% Slopes
- MrD – Morrison sandy loam, 15%-25% Slopes
- MtF – Morrison very stony loam, steep
- WyA – Wyoming gravelly sand loam, rarely flooded, 0 to 5 percent slopes

EXISTING FEATURES LEGEND

- Existing Building
- Existing Curbing & Edge of Pavement
- Existing Concrete Areas
- 1109 Existing Contours w/ Elevation (1's & 2's)
- 1110 Existing Contours w/ Elevation (5's & 10's)
- Existing Sanitary Sewer w/ Manhole
- Existing Sanitary Sewer Lateral w/ Clean Out
- Existing Water Line w/ Valve
- Existing Water Service Lateral
- Existing Storm Sewer Line w/ Inlet
- Existing Gas Line
- Existing Underground Electric
- Existing Underground Telephone
- Existing Underground TV Cable
- Existing Overhead Utility Line w/ Pole
- Existing Fire Hydrant
- Existing Soil Limit Line / Boundary
- Existing Soil Type
- Existing Tree Row
- Existing Stream
- Existing Floodplain
- Delineated Wetlands Line

PROPOSED FEATURES LEGEND

- PROPOSED BUILDING
- PROPOSED CURBING & EDGE OF PAVEMENT
- PROPOSED CONCRETE SIDEWALK
- PROPOSED CONCRETE AREAS
- PROPOSED BITUMINOUS PAVEMENT AREAS
- 1109 PROPOSED MINOR CONTOURS W/ ELEVATION (1's & 2's)
- 1110 PROPOSED MAJOR CONTOURS W/ ELEVATION (5's & 10's)
- PROPOSED 8" SANITARY SEWER W/ MANHOLE
- PROPOSED 6" PVC SANITARY SEWER LATERAL W/ CLEAN OUT
- PROPOSED 8" WATER LINE W/ VALVE
- PROPOSED WATER SERVICE LATERAL W/ CURB BOX
- PROPOSED STORM SEWER W/ TYPE C INLET
- PROPOSED GAS LINE
- ETC PROPOSED COMBINED UTILITY CONDUIT
- PROPOSED STORM SEWER INLET – TYPE M
- PROPOSED STORM SEWER INLET – TYPE C
- PROPOSED TREE ROW
- PROPOSED PAINTED HANDICAPPED PARKING SYMBOLS
- PROPOSED PARKING STALL COUNT
- PROPOSED DEPRESSED CURB W/ CURB TRANSITION

EROSION & SEDIMENTATION CONTROL LEGEND

- NPDES BOUNDARY LINE
- LIMIT OF DISTURBANCE
- RIP-RAP APRON

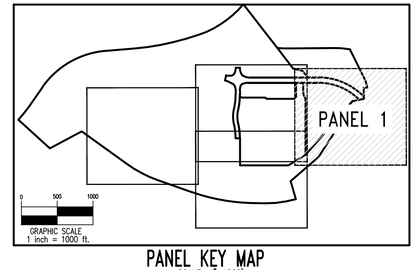

PANEL KEY MAP
SCALE: 1"=1000'

GRAPHIC SCALE

60 0 30 60 120 240

(IN FEET)
1 inch = 60 ft.

PennTerra ENGINEERING INC.

CENTRAL PENNSYLVANIA REGION OFFICE:
3075 ENTERPRISE DRIVE
SUITE 100
STATE COLLEGE, PA 16801
PH: 814-231-8285
Fax: 814-237-2308

LANCASTER REGION OFFICE:
3904 B ABEL DRIVE
COLUMBIA, PA 17512
PH: 717-522-5031
Fax: 717-522-5046

WWW.PENNTERRA.COM

COPYRIGHT 2021 BY THE ENGINEER
THE INFORMATION CONTAINED HEREON MAY NOT BE USED OR COPIED IN ANY MANNER WITHOUT THE WRITTEN PERMISSION OF THE ENGINEER EXCEPT AS OTHERWISE PROVIDED BY APPROPRIATE LAWS OR STATUTES.
© PENNTERRA ENGINEERING 2021
ALL RIGHTS RESERVED

COMMONWEALTH OF PENNSYLVANIA
REGISTERED PROFESSIONAL
C. ANTHONY FRUCHTL
ENGINEER
PE-062413

Designer	EAH
Draftsman	EAH
Proj.Manager	CAF
Surveyor	BRK
Perimeter Ck.	
Book	463 Pg 1
File	19286.01-PCSMP-PANEL-1
Layout	PCSMP-PANEL 1

Date	Description

REVISIONS

TOFTREES PLANNED COMMUNITY WEST MOUNT NITTANY HEALTH OUTPATIENT CENTER

PATTON TOWNSHIP
CENTRE COUNTY
PENNSYLVANIA

FINAL LAND DEVELOPMENT PLAN

POST CONSTRUCTION STORMWATER MANAGEMENT PLAN – PANEL 1

PROJECT NO.	19286.01
DATE	NOVEMBER 5, 2021
SCALE	1"=60'
SHEET NO.	PC2

P:\ddtpproj\2019\19286\19286.01 - Phase 1\Design\plot files\final plans\19286.01-PCSMP-PANEL-1.dwg, 11/5/2021 11:18:27 AM, 1:1

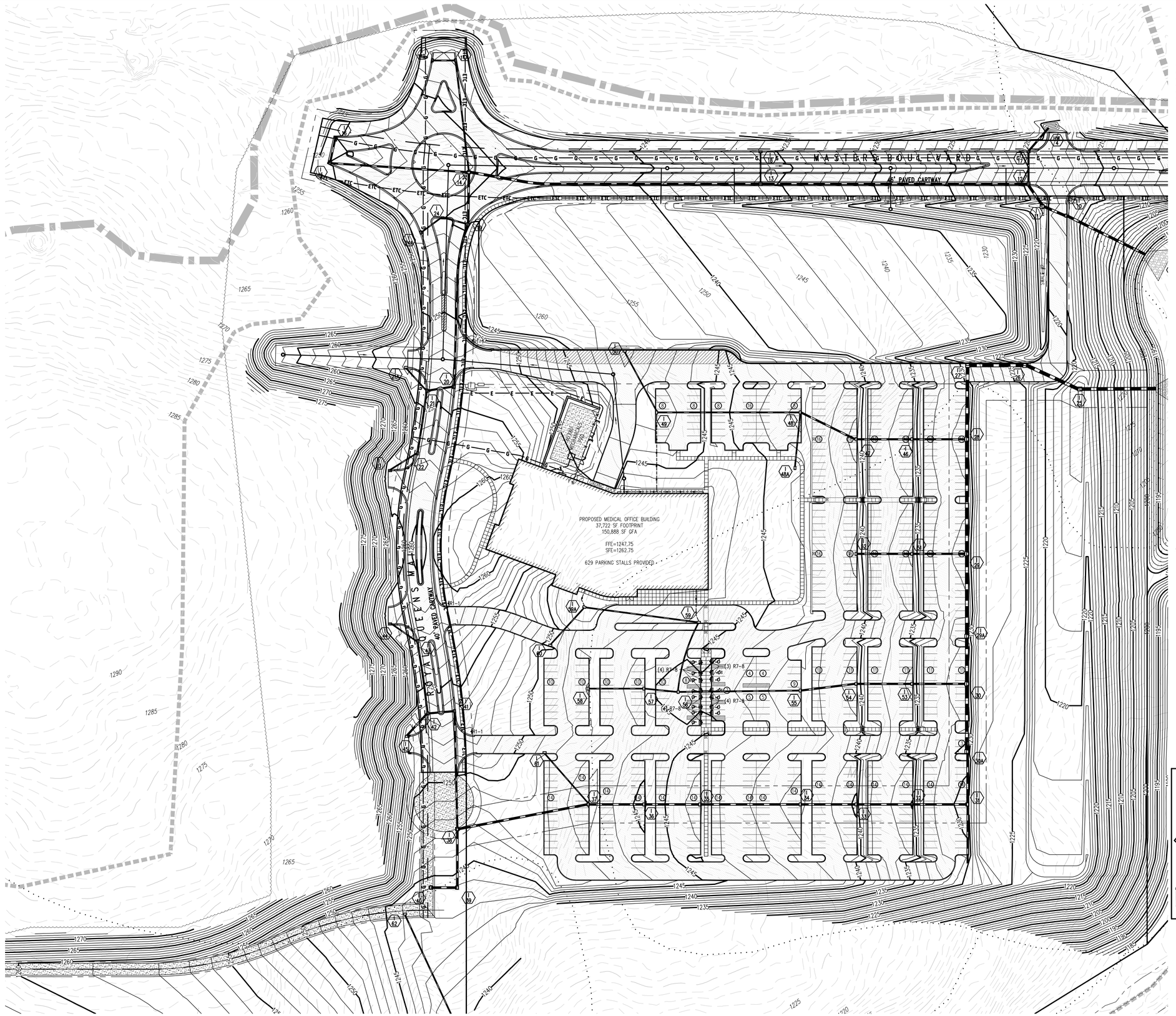

SURVEY FEATURES LEGEND

- Property Line, Lot Line or Right of Way Line
- Adjoining Property Line

SOILS LEGEND

Soil cover on the site consists of:

LvB – Leetonia sand, variant 3%-8% Slopes
MrB – Morrison sandy loam, 2%-8% Slopes
MrC – Morrison sandy loam, 8%-15% Slopes
MrD – Morrison sandy loam, 15%-25% Slopes
MtF – Morrison very stony loam, steep
WyA – Wyoming gravelly sand loam, rarely flooded, 0 to 5 percent slopes

EXISTING FEATURES LEGEND

- Existing Building
- Existing Curbing & Edge of Pavement
- Existing Concrete Areas
- 1109 Existing Contours w/ Elevation (1's & 2's)
- 1110 Existing Contours w/ Elevation (5's & 10's)
- Existing Sanitary Sewer w/ Manhole
- Existing Sanitary Sewer Lateral w/ Clean Out
- Existing Water Line w/ Valve
- Existing Water Service Lateral
- Existing Storm Sewer Line w/ Inlet
- Existing Gas Line
- Existing Underground Electric
- Existing Underground Telephone
- Existing Underground TV Cable
- Existing Overhead Utility Line w/ Pole
- Existing Fire Hydrant
- Existing Soil Limit Line / Boundary
- HaB Existing Soil Type
- Existing Tree Row
- Existing Stream
- Existing Floodplain
- Delineated Wetlands Line

PROPOSED FEATURES LEGEND

- PROPOSED BUILDING
- PROPOSED CURBING & EDGE OF PAVEMENT
- PROPOSED CONCRETE SIDEWALK
- PROPOSED CONCRETE AREAS
- PROPOSED BITUMINOUS PAVEMENT AREAS
- 1109 PROPOSED MINOR CONTOURS W/ ELEVATION (1's & 2's)
- 1110 PROPOSED MAJOR CONTOURS W/ ELEVATION (5's & 10's)
- PROPOSED 8" SANITARY SEWER W/ MANHOLE
- PROPOSED 6" PVC SANITARY SEWER LATERAL W/ CLEAN OUT
- PROPOSED 8" WATER LINE W/ VALVE
- CB PROPOSED WATER SERVICE LATERAL W/ CURB BOX
- PROPOSED STORM SEWER W/ TYPE C INLET
- G PROPOSED GAS LINE
- ETC PROPOSED COMBINED UTILITY CONDUIT
- PROPOSED STORM SEWER INLET – TYPE M
- PROPOSED STORM SEWER INLET – TYPE C
- PROPOSED TREE ROW
- VAN PROPOSED PAINTED HANDICAPPED PARKING SYMBOLS
- 15 PROPOSED PARKING STALL COUNT
- DEPRESSED CURB TRANSITION CURB PROPOSED DEPRESSED CURB W/ CURB TRANSITION

EROSION & SEDIMENTATION CONTROL LEGEND

- NPDES BOUNDARY LINE
- LIMIT OF DISTURBANCE
- RIP-RAP APRON

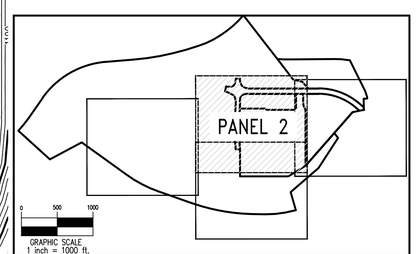

PANEL KEY MAP
SCALE: 1"=1000'

GRAPHIC SCALE
60 0 30 60 120 240
(IN FEET)
1 inch = 60 ft.

PennTerra ENGINEERING INC.

CENTRAL PENNSYLVANIA REGION OFFICE:
3075 ENTERPRISE DRIVE
SUITE 100
STATE COLLEGE, PA 16801
PH: 814-231-8285
Fax: 814-237-2308

LANCASTER REGION OFFICE:
3904 B ABEL DRIVE
COLUMBIA, PA 17512
PH: 717-522-5031
Fax: 717-522-5046

WWW.PENNTERRA.COM

COPYRIGHT 2021 BY THE ENGINEER
THE INFORMATION CONTAINED HEREON MAY NOT BE USED OR COPIED IN ANY MANNER WITHOUT THE WRITTEN PERMISSION OF THE ENGINEER EXCEPT AS OTHERWISE PROVIDED BY APPROPRIATE LAWS OR STATUTES.
© PENNTERRA ENGINEERING 2021 ALL RIGHTS RESERVED

COMMONWEALTH OF PENNSYLVANIA
REGISTERED PROFESSIONAL
C. ANTHONY FRUCHTL
ENGINEER
PE-062413

Designer EAH
Draftsman EAH
Proj.Manager CAF
Surveyor BRK
Perimeter Ck.
Book 463 Pg 1
File 19286.01-PCSMP-PANEL-2
Layout PCSMP-PANEL 2

Date	Description

REVISIONS

TOFTREES PLANNED COMMUNITY WEST MOUNT NITTANY HEALTH OUTPATIENT CENTER

PATTON TOWNSHIP
CENTRE COUNTY
PENNSYLVANIA

FINAL LAND DEVELOPMENT PLAN

POST CONSTRUCTION STORMWATER MANAGEMENT PLAN – PANEL 2

PROJECT NO.
19286.01
DATE
NOVEMBER 5, 2021
SCALE
1"=60'
SHEET NO.
PC3

P:\dotproj\2019\19286\19286.01 - Phase 1\Design\plot files\final plans\19286.01-PCSMP-PANEL-2.dwg, 11/5/2021 11:19:40 AM, 1:1



SURVEY FEATURES LEGEND

- Property Line, Lot Line or Right of Way Line
- Adjoining Property Line

SOILS LEGEND

Soil cover on the site consists of:

- LvB – Leetonia sand, variant 3%-8% Slopes
- MrB – Morrison sandy loam, 2%-8% Slopes
- MrC – Morrison sandy loam, 8%-15% Slopes
- MrD – Morrison sandy loam, 15%-25% Slopes
- MtF – Morrison very stony loam, steep
- WyA – Wyoming gravelly sand loam, rarely flooded, 0 to 5 percent slopes

EXISTING FEATURES LEGEND

- Existing Building
- Existing Curbing & Edge of Pavement
- Existing Concrete Areas
- 1109 Existing Contours w/ Elevation (1's & 2's)
- 1110 Existing Contours w/ Elevation (5's & 10's)
- Existing Sanitary Sewer w/ Manhole
- Existing Sanitary Sewer Lateral w/ Clean Out
- Existing Water Line w/ Valve
- Existing Water Service Lateral
- Existing Storm Sewer Line w/ Inlet
- G Existing Gas Line
- E Existing Underground Electric
- T Existing Underground Telephone
- TV Existing Underground TV Cable
- Ø Existing Overhead Utility Line w/ Pole
- Existing Fire Hydrant
- Existing Soil Limit Line / Boundary
- HaB Existing Soil Type
- Existing Tree Row
- Existing Stream
- Existing Floodplain
- Delineated Wetlands Line

PROPOSED FEATURES LEGEND

- PROPOSED BUILDING
- PROPOSED CURBING & EDGE OF PAVEMENT
- PROPOSED CONCRETE SIDEWALK
- PROPOSED CONCRETE AREAS
- PROPOSED BITUMINOUS PAVEMENT AREAS
- 1109 PROPOSED MINOR CONTOURS W/ ELEVATION (1's & 2's)
- 1110 PROPOSED MAJOR CONTOURS W/ ELEVATION (5's & 10's)
- PROPOSED 8" SANITARY SEWER W/ MANHOLE
- PROPOSED 6" PVC SANITARY SEWER LATERAL W/ CLEAN OUT
- PROPOSED 8" WATER LINE W/ VALVE
- CB PROPOSED WATER SERVICE LATERAL W/ CURB BOX
- PROPOSED STORM SEWER W/ TYPE C INLET
- G G PROPOSED GAS LINE
- ETC ETC PROPOSED COMBINED UTILITY CONDUIT
- PROPOSED STORM SEWER INLET – TYPE M
- PROPOSED STORM SEWER INLET – TYPE C
- PROPOSED TREE ROW
- VAN PROPOSED PAINTED HANDICAPPED PARKING SYMBOLS
- 13 PROPOSED PARKING STALL COUNT
- DEPRESSED CURB TRANSITION CURB PROPOSED DEPRESSED CURB W/ CURB TRANSITION

EROSION & SEDIMENTATION CONTROL LEGEND

- NPDES BOUNDARY LINE
- LIMIT OF DISTURBANCE
- RIP-RAP APRON

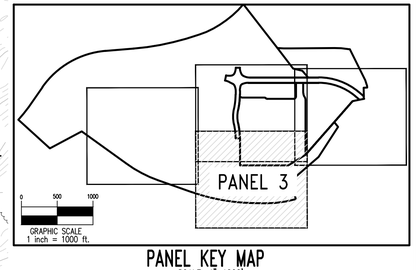

PANEL KEY MAP
SCALE: 1"=1000'

GRAPHIC SCALE

60 0 30 60 120 240

(IN FEET)
1 inch = 60 ft.

PennTerra ENGINEERING INC.

CENTRAL PENNSYLVANIA REGION OFFICE:
3075 ENTERPRISE DRIVE
SUITE 100
STATE COLLEGE, PA 16801
PH: 814-231-8285
Fax: 814-237-2308

LANCASTER REGION OFFICE:
3904 B ABEL DRIVE
COLUMBIA, PA 17512
PH: 717-522-5031
Fax: 717-522-5046

WWW.PENNTERRA.COM

COPYRIGHT 2021 BY THE ENGINEER
THE INFORMATION CONTAINED HEREON MAY NOT BE USED OR COPIED IN ANY MANNER WITHOUT THE WRITTEN PERMISSION OF THE ENGINEER EXCEPT AS OTHERWISE PROVIDED BY APPROPRIATE LAWS OR STATUTES.
© PENNTERRA ENGINEERING 2021
ALL RIGHTS RESERVED

COMMONWEALTH OF PENNSYLVANIA
REGISTERED PROFESSIONAL
C. ANTHONY FRUCHTL
ENGINEER
PE-062413

Designer	EAH
Draftsman	EAH
Proj.Manager	CAF
Surveyor	BRK
Perimeter Ck.	
Book	463 Pg 1
File	19286.01-PCSMP-PANEL-3
Layout	PCSMP-PANEL 3

Date	Description
	REVISIONS

TOFTREES PLANNED COMMUNITY WEST MOUNT NITTANY HEALTH OUTPATIENT CENTER

PATTON TOWNSHIP
CENTRE COUNTY
PENNSYLVANIA

FINAL LAND DEVELOPMENT PLAN

POST CONSTRUCTION STORMWATER MANAGEMENT PLAN – PANEL 3

PROJECT NO.	19286.01
DATE	NOVEMBER 5, 2021
SCALE	1"=60'
SHEET NO.	PC4

P:\ltdcproj\2019\19286\19286.01 - Phase 1\Design\plot files\final plans\19286.01-PCSMP-PANEL-3.dwg, 11/5/2021 11:20:53 AM, 1:1



SURVEY FEATURES LEGEND

- Property Line, Lot Line or Right of Way Line
- Adjoining Property Line

SOILS LEGEND

Soil cover on the site consists of:

- LvB – Leetonia sand, variant 3%-8% Slopes
- MrB – Morrison sandy loam, 2%-8% Slopes
- MrC – Morrison sandy loam, 8%-15% Slopes
- MrD – Morrison sandy loam, 15%-25% Slopes
- MtF – Morrison very stony loam, steep
- WyA – Wyoming gravelly sand loam, rarely flooded, 0 to 5 percent slopes

EXISTING FEATURES LEGEND

- EXISTING BUILDING — Existing Building
- Existing Curbing & Edge of Pavement
- Existing Concrete Areas
- 1109 — Existing Contours w/ Elevation (1's & 2's)
- 1110 — Existing Contours w/ Elevation (5's & 10's)
- S — Existing Sanitary Sewer w/ Manhole
- CO / S — Existing Sanitary Sewer Lateral w/ Clean Out
- WV — Existing Water Line w/ Valve
- W — Existing Water Service Lateral
- Existing Storm Sewer Line w/ Inlet
- G — Existing Gas Line
- E — Existing Underground Electric
- T — Existing Underground Telephone
- TV — Existing Underground TV Cable
- Existing Overhead Utility Line w/ Pole
- Existing Fire Hydrant
- Existing Soil Limit Line / Boundary
- HaB — Existing Soil Type
- Existing Tree Row
- Existing Stream
- Existing Floodplain
- Delineated Wetlands Line

PROPOSED FEATURES LEGEND

- PROPOSED BUILDING — PROPOSED BUILDING
- PROPOSED CURBING & EDGE OF PAVEMENT
- PROPOSED CONCRETE SIDEWALK
- PROPOSED CONCRETE AREAS
- PROPOSED BITUMINOUS PAVEMENT AREAS
- 1109 — PROPOSED MINOR CONTOURS W/ ELEVATION (1's & 2's)
- 1110 — PROPOSED MAJOR CONTOURS W/ ELEVATION (5's & 10's)
- PROPOSED 8" SANITARY SEWER W/ MANHOLE
- PROPOSED 6" PVC SANITARY SEWER LATERAL W/ CLEAN OUT
- WV — PROPOSED 8" WATER LINE W/ VALVE
- CB — W — PROPOSED WATER SERVICE LATERAL W/ CURB BOX
- PROPOSED STORM SEWER W/ TYPE C INLET
- G — PROPOSED GAS LINE
- ETC — PROPOSED COMBINED UTILITY CONDUIT
- PROPOSED STORM SEWER INLET – TYPE M
- PROPOSED STORM SEWER INLET – TYPE C
- PROPOSED TREE ROW
- VAN — PROPOSED PAINTED HANDICAPPED PARKING SYMBOLS
- 13 — PROPOSED PARKING STALL COUNT
- DEPRESSED CURB / TRANSITION CURB — PROPOSED DEPRESSED CURB W/ CURB TRANSITION

EROSION & SEDIMENTATION CONTROL LEGEND

- NPDES BOUNDARY LINE
- LIMIT OF DISTURBANCE
- RIP-RAP APRON

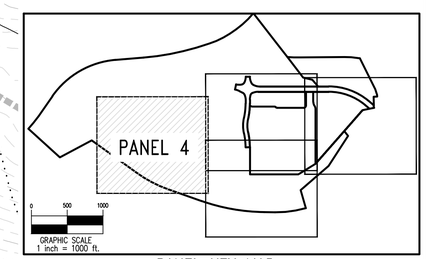

PANEL KEY MAP
SCALE: 1"=1000'

GRAPHIC SCALE

60 0 30 60 120 240

(IN FEET)
1 inch = 60 ft.

PennTerra ENGINEERING INC.

CENTRAL PENNSYLVANIA REGION OFFICE:
3075 ENTERPRISE DRIVE
SUITE 100
STATE COLLEGE, PA 16801
PH: 814-231-8285
Fax: 814-237-2308

LANCASTER REGION OFFICE:
3904 B ABEL DRIVE
COLUMBIA, PA 17512
PH: 717-522-5031
Fax: 717-522-5046

WWW.PENNTERRA.COM

COPYRIGHT 2021 BY THE ENGINEER
THE INFORMATION CONTAINED HEREON MAY NOT BE USED OR COPIED IN ANY MANNER WITHOUT THE WRITTEN PERMISSION OF THE ENGINEER EXCEPT AS OTHERWISE PROVIDED BY APPROPRIATE LAWS OR STATUTES.
© PENNTERRA ENGINEERING 2021
ALL RIGHTS RESERVED

COMMONWEALTH OF PENNSYLVANIA — REGISTERED PROFESSIONAL — C. ANTHONY FRUCHTL — ENGINEER PE-062413

Designer	EAH
Draftsman	EAH
ProjManager	CAF
Surveyor	BRK
Perimeter Ck.	
Book	463 Pg 1
File	19286.01-PCSMP-PANEL-4
Layout	PCSMP-PANEL 4

Date	Description

REVISIONS

TOFTREES PLANNED COMMUNITY WEST MOUNT NITTANY HEALTH OUTPATIENT CENTER

PATTON TOWNSHIP
CENTRE COUNTY
PENNSYLVANIA

FINAL LAND DEVELOPMENT PLAN

POST CONSTRUCTION STORMWATER MANAGEMENT PLAN – PANEL 4

PROJECT NO.	19286.01
DATE	NOVEMBER 5, 2021
SCALE	1"=60'
SHEET NO.	PC5

P:\ldotproj\2019\19286\19286.01 - Phase 1\Design\pcsd files\final plans\19286.01-PCSMP-PANEL-4.dwg, 11/5/2021 11:22:08 AM, 1:1

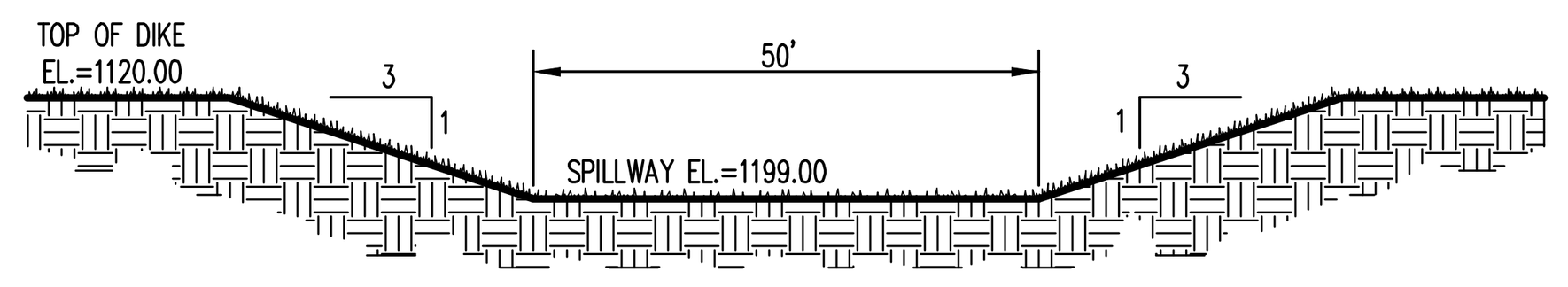

INFILTRATION BASIN #1 SPILLWAY DETAIL

NOT TO SCALE

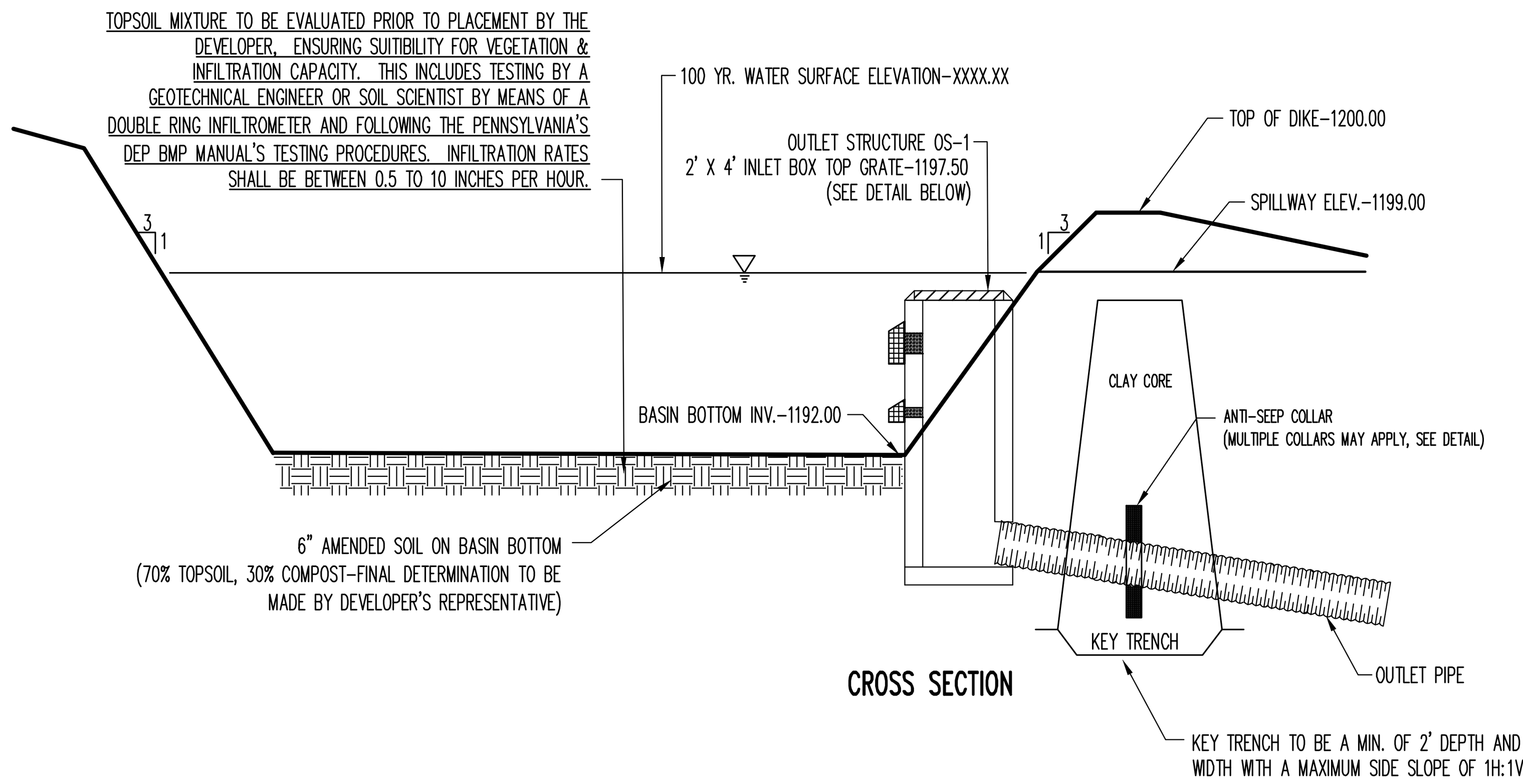

CROSS SECTION

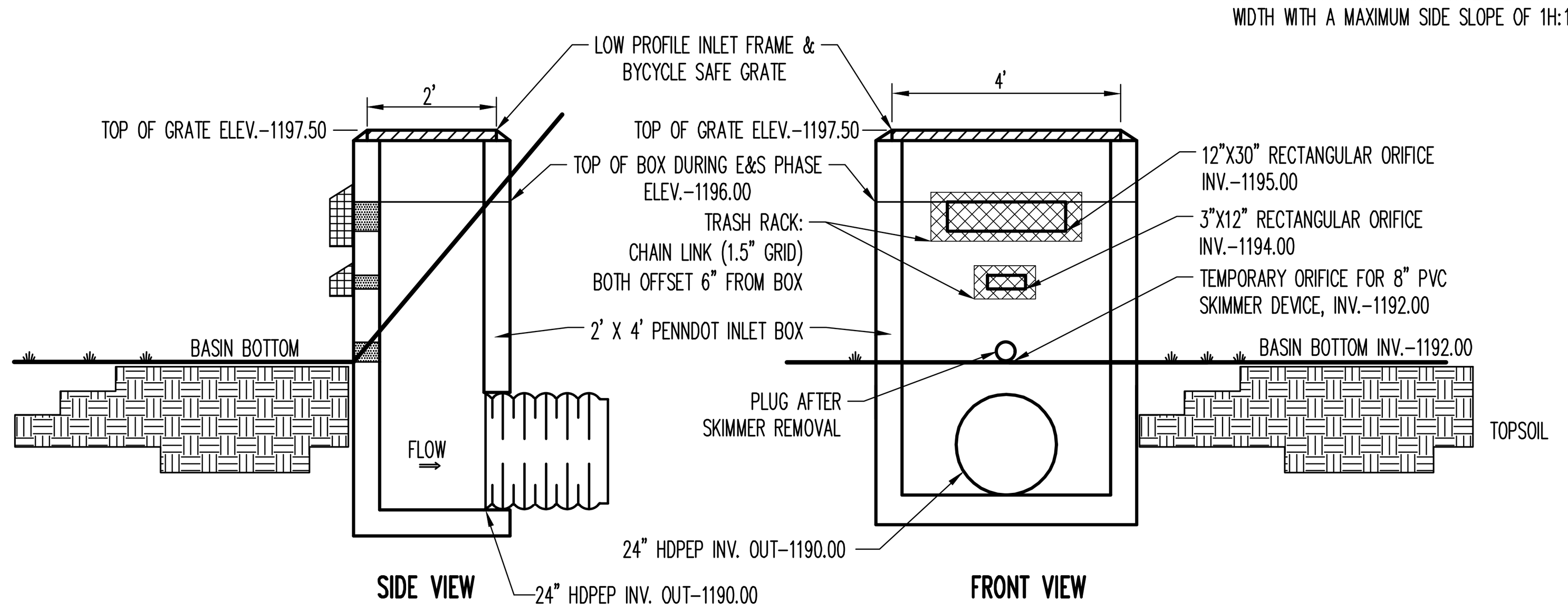

SIDE VIEW FRONT VIEW

OUTLET STRUCTURE DETAIL

INFILTRATION BASIN NOTES:

1. THE BASIN SHALL BE INSTALLED PRIOR TO OR CONCURRENT WITH ANY EARTH MOVING OR LAND DISTURBANCE WHICH IT WILL SERVE.
2. THE EMBANKMENT SHALL BE COMPACTED IN LAYERS TO A DENSITY OF 100% MAXIMUM DRY DENSITY AS DETERMINED BY ASTM D698.
3. THE EMBANKMENT SHALL BE CONSTRUCTED WITH SOIL THAT HAS LOW TO MODERATE ERODIBILITY (K FACTOR OF 32 OR LESS).
4. TEMPORARY AND PERMANENT GRASSES OR STABILIZATION MEASURES SHALL BE ESTABLISHED IN THE SIDES AND BASE OF ALL EARTHEN BASINS WITHIN 15 DAYS OF CONSTRUCTION.

INFILTRATION BASIN #1 DETAIL

NOT TO SCALE

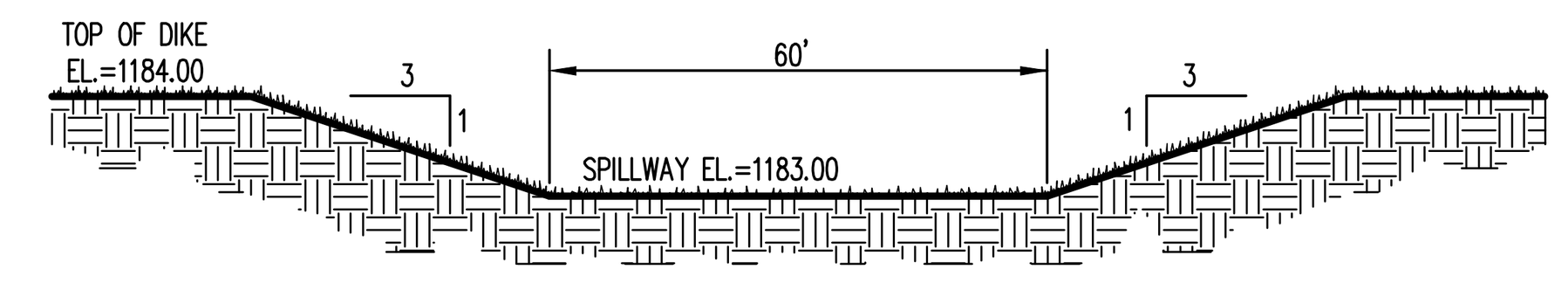

INFILTRATION BASIN #2 SPILLWAY DETAIL

NOT TO SCALE

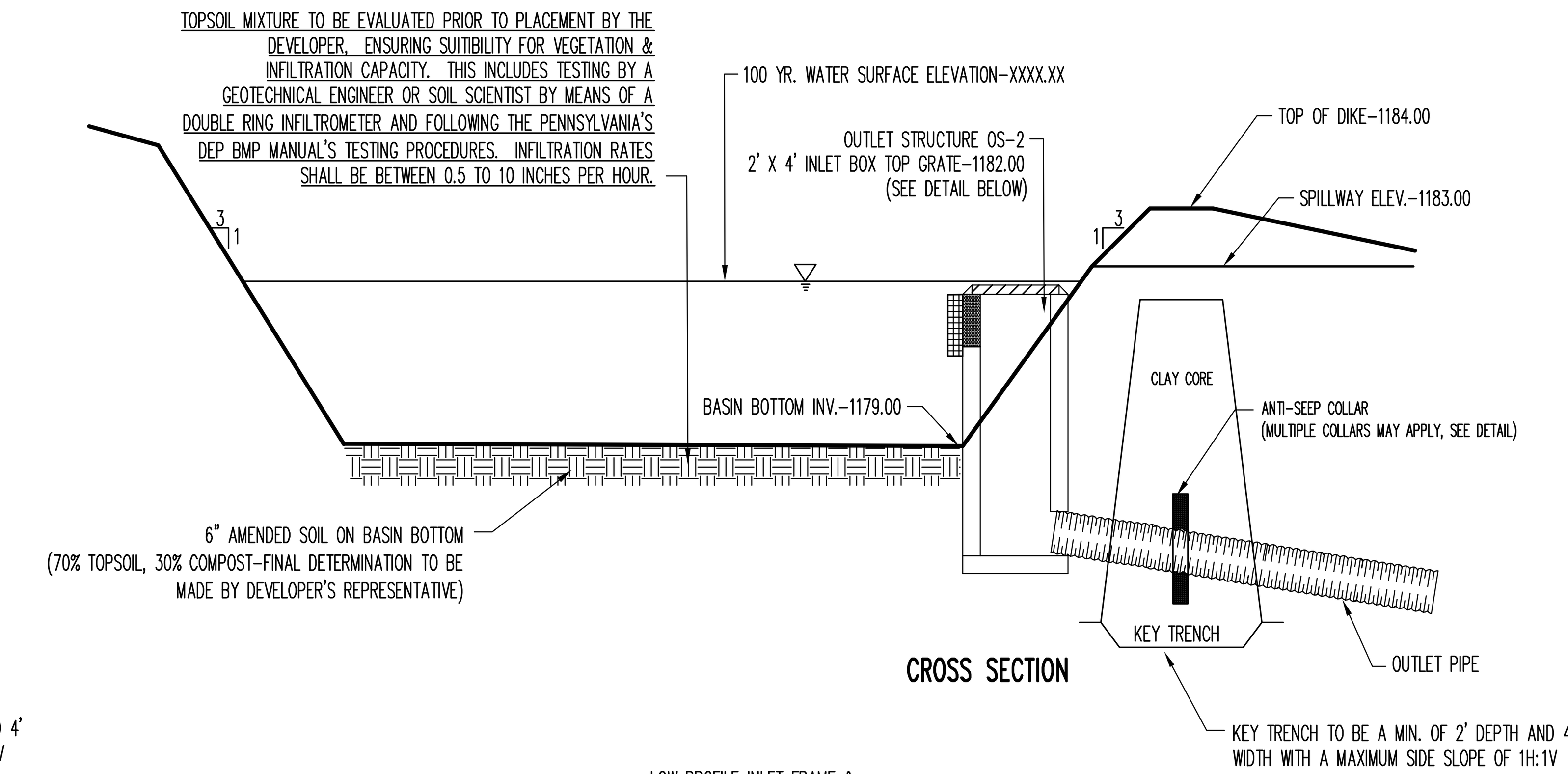

CROSS SECTION

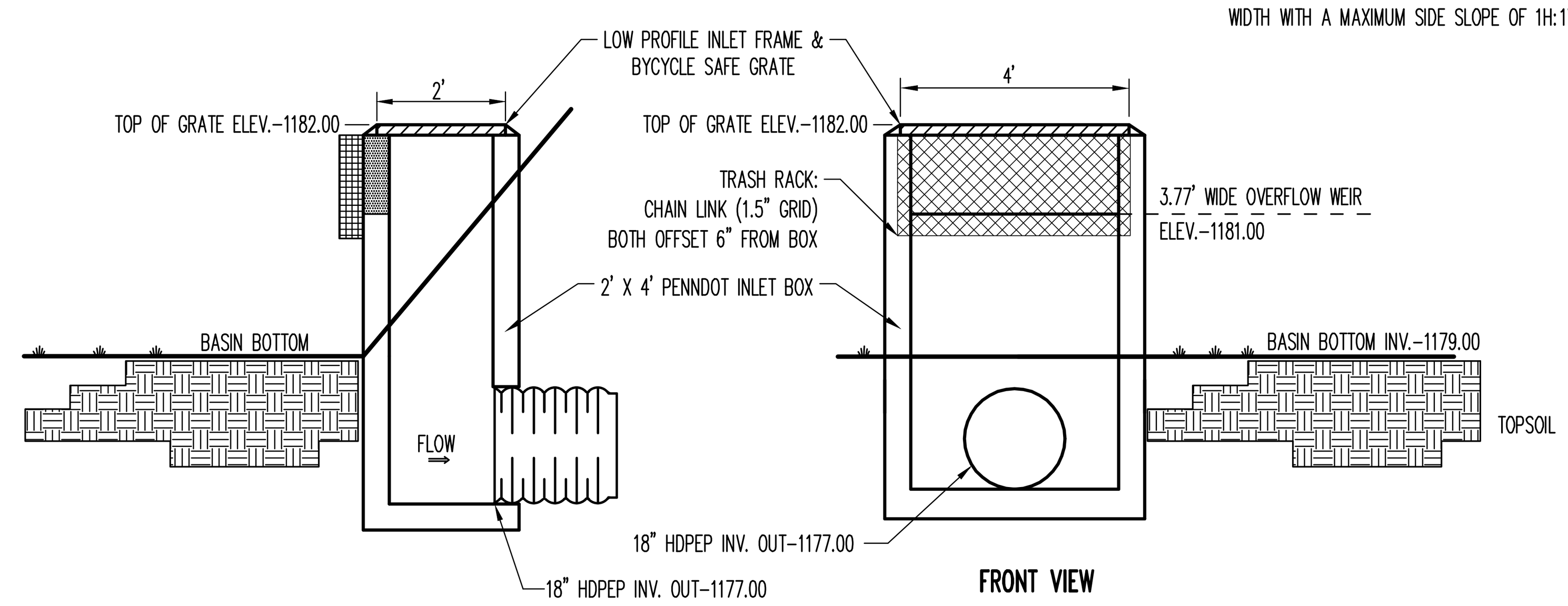

FRONT VIEW

OUTLET STRUCTURE DETAIL

INFILTRATION BASIN NOTES:

1. THE BASIN SHALL BE INSTALLED PRIOR TO OR CONCURRENT WITH ANY EARTH MOVING OR LAND DISTURBANCE WHICH IT WILL SERVE.
2. THE EMBANKMENT SHALL BE COMPACTED IN LAYERS TO A DENSITY OF 100% MAXIMUM DRY DENSITY AS DETERMINED BY ASTM D698.
3. THE EMBANKMENT SHALL BE CONSTRUCTED WITH SOIL THAT HAS LOW TO MODERATE ERODIBILITY (K FACTOR OF 32 OR LESS).
4. TEMPORARY AND PERMANENT GRASSES OR STABILIZATION MEASURES SHALL BE ESTABLISHED IN THE SIDES AND BASE OF ALL EARTHEN BASINS WITHIN 15 DAYS OF CONSTRUCTION.

INFILTRATION BASIN #2 DETAIL

NOT TO SCALE

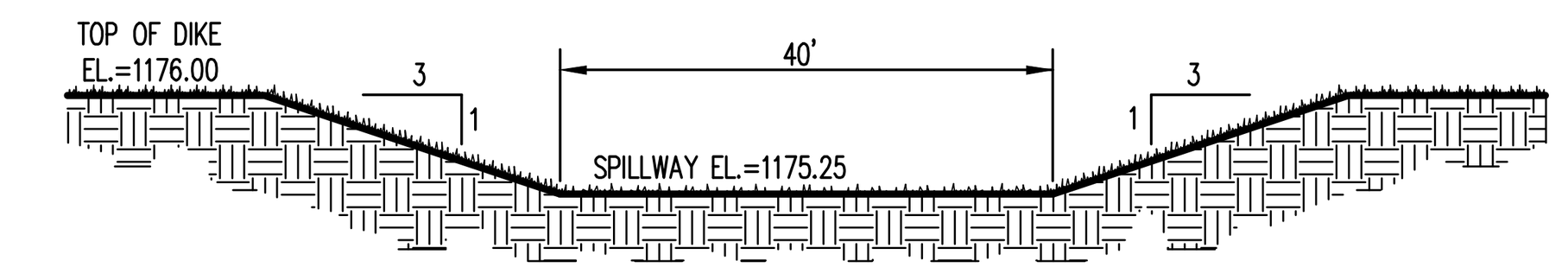

INFILTRATION BASIN #3 SPILLWAY DETAIL

NOT TO SCALE

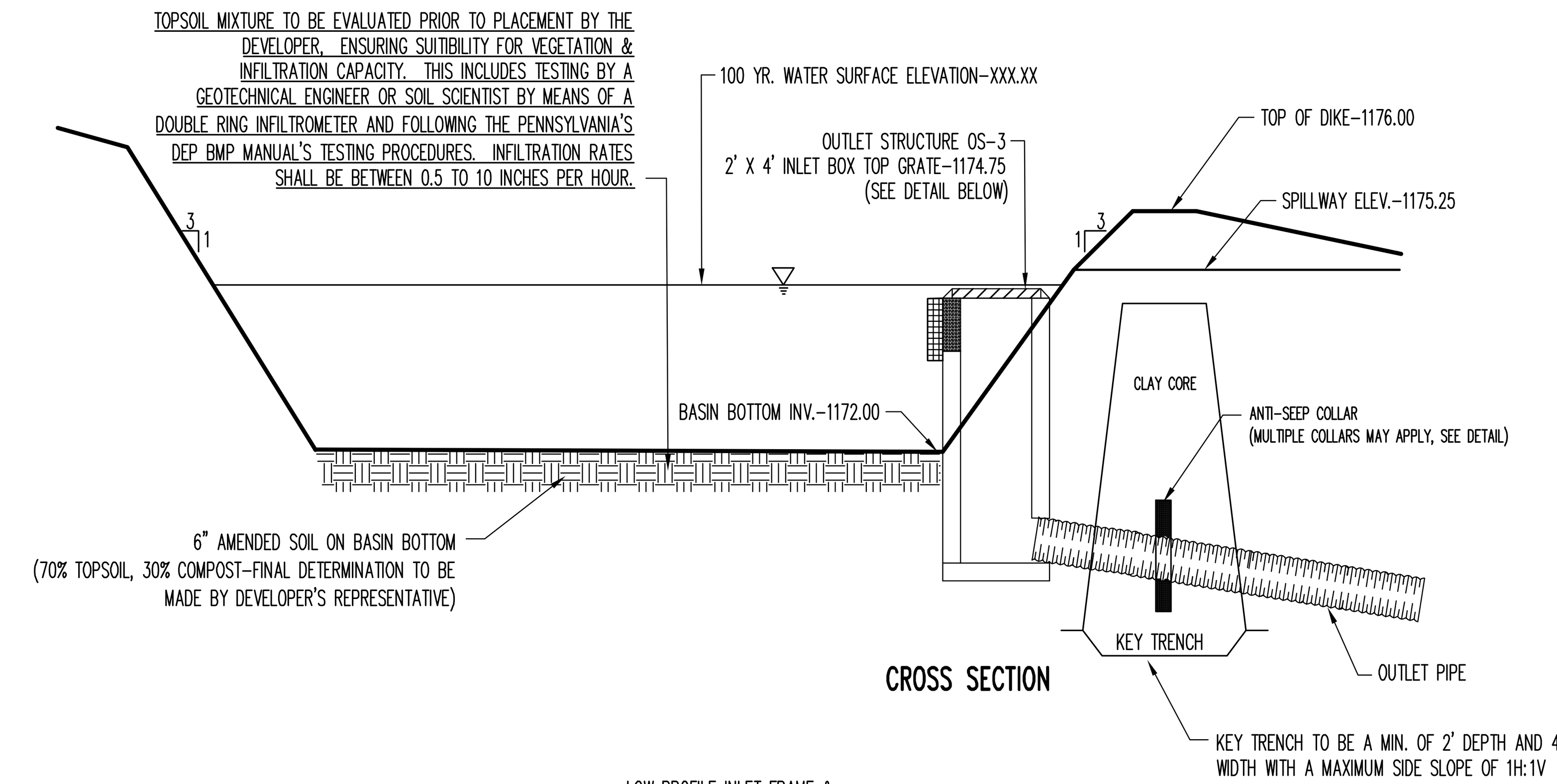

CROSS SECTION

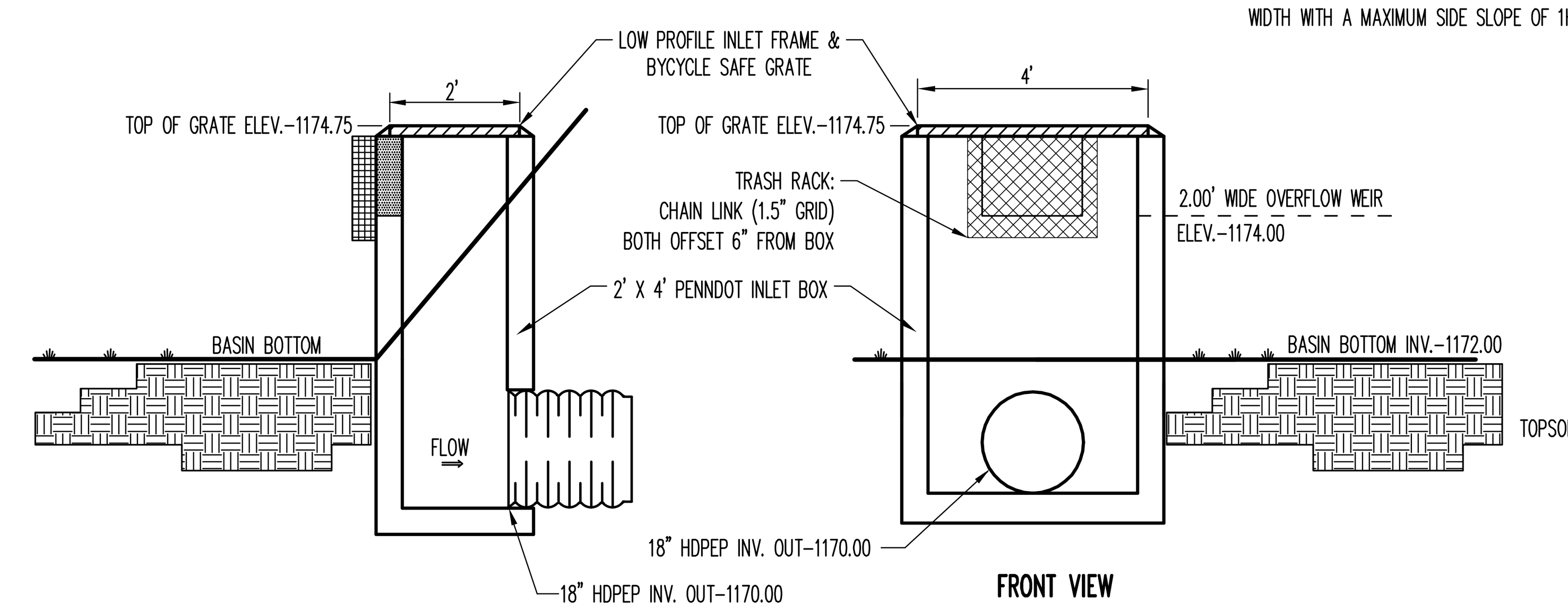

FRONT VIEW

OUTLET STRUCTURE DETAIL

INFILTRATION BASIN NOTES:

1. THE BASIN SHALL BE INSTALLED PRIOR TO OR CONCURRENT WITH ANY EARTH MOVING OR LAND DISTURBANCE WHICH IT WILL SERVE.
2. THE EMBANKMENT SHALL BE COMPACTED IN LAYERS TO A DENSITY OF 100% MAXIMUM DRY DENSITY AS DETERMINED BY ASTM D698.
3. THE EMBANKMENT SHALL BE CONSTRUCTED WITH SOIL THAT HAS LOW TO MODERATE ERODIBILITY (K FACTOR OF 32 OR LESS).
4. TEMPORARY AND PERMANENT GRASSES OR STABILIZATION MEASURES SHALL BE ESTABLISHED IN THE SIDES AND BASE OF ALL EARTHEN BASINS WITHIN 15 DAYS OF CONSTRUCTION.

INFILTRATION BASIN #3 DETAIL

NOT TO SCALE

BASIN BERM SPECIFICATIONS (APPLIES TO INFILTRATION BASIN 1, 2, 3 & 4)

SITE PREPARATION

SITE PREPARATION WILL INCLUDE THE REMOVAL OF LOOSE AND/OR DELETERIOUS FILL MATERIALS AS WELL AS ANY SOFT/LOOSE/WET NATURAL SOILS. AFTER ACHIEVING FINISHED SUBGRADE IN THE DISTURBED AREAS, AND PRIOR TO PLACING EMBANKMENT FILL IN AREAS BELOW FINISHED SUBGRADE, THE EXPOSED SUBGRADE SHALL BE EVALUATED BY THE PROJECT'S GEOTECHNICAL ENGINEER OR DESIGNATED REPRESENTATIVE (GER) TO CONFIRM THAT ALL UNSUITABLE OR UNSTABLE MATERIALS HAVE BEEN REMOVED. WHERE PRACTICAL, THOSE AREAS THAT ARE AT FINISHED SUBGRADE OR THOSE AREAS THAT ARE TO RECEIVE STRUCTURAL FILL SHALL BE PROOFROLLED WITH EQUIPMENT DEEMED ACCEPTABLE TO THE GER. NECESSARY REPAIRS TO THE SUBGRADE SHALL BE DIRECTED BY THE GER.

EMBANKMENT FILL

EMBANKMENT FILL SHALL CONSIST OF ON-SITE SOILS WITH USCS CLASSIFICATIONS OF CL, CH, AND/OR CL-ML. ROCK FRAGMENTS SHALL NOT EXCEED 3 INCHES IN MAXIMUM PARTICLE SIZE AND THE ORGANIC CONTACT SHALL NOT EXCEED 1 PERCENT. ALL MATERIALS TO BE UTILIZED AS EMBANKMENT FILL SHALL BE EVALUATED BY THE GER PRIOR TO PLACEMENT IN THE FIELD. ALL EMBANKMENT FILL SHALL BE PLACED IN HORIZONTAL LIFTS NOT EXCEEDING 8 INCHES IN LOOSE THICKNESS AND WITHIN 2 PERCENT OF OPTIMUM MOISTURE FOR COMPACTION. THE FILL SHALL BE COMPACTED TO A MINIMUM OF 98 PERCENT OF MAXIMUM DRY DENSITY AS DETERMINED BY THE STANDARD PROCTOR METHOD (ASTM D698). EACH LAYER OF THE EMBANKMENT FILL SHALL BE COMPACTED WITH A SHEEPS-FOOT ROLLER APPROVED BY THE GER. A MINIMUM OF EVERY 50 LINEAL FEET OF EMBANKMENT FOR EACH LIFT SHALL BE TESTED WITH A NUCLEAR DENSITY GAUGE IN ACCORDANCE WITH ASTM D6938.

STORMWATER FACILITIES MAINTENANCE NOTES:

ALL STORMWATER MANAGEMENT FACILITIES WITHIN THE DEVELOPMENT KNOWN AS 'THE STATION' AND NOT CONTAINED IN A PATTON TOWNSHIP RIGHT-OF-WAY SHALL BE OWNED AND MAINTAINED BY THE OWNER/DEVELOPER. PATTON TOWNSHIP, ITS AGENTS AND ASSIGNS SHALL HAVE THE UNINTERRUPTED RIGHT TO ACCESS THE PROPERTY FOR INSPECTION AND MAINTENANCE OF THE STORMWATER FACILITIES. THIS NOTE APPLIES TO THE ENTIRE PROPERTY SHOWN ON THESE PLANS AND SHALL BE IN EFFECT FOR PERPETUITY.

PATTON TOWNSHIP AND THE CENTRE COUNTY CONSERVATION DISTRICT REQUIRES THE OWNER TO MAINTAIN A RECORD OF ALL INSPECTIONS, REPAIRS, AND MAINTENANCE ACTIVITIES ASSOCIATED WITH THE PROPOSED STORMWATER MANAGEMENT AND PERMANENT EROSION AND SEDIMENT POLLUTION CONTROL FACILITIES AT THIS PROJECT SITE. THE OWNER SHALL IMMEDIATELY NOTIFY THE PATTON TOWNSHIP AND CENTRE COUNTY CONSERVATION DISTRICT PRIOR TO INITIATING ANY MAJOR REPAIR ACTIVITIES.

THE OWNER HEREBY ACKNOWLEDGES PATTON TOWNSHIP'S RIGHT TO PERIODICALLY ACCESS THE PROJECT SITE TO INSPECT THE PERMANENT STORMWATER MANAGEMENT FACILITIES THAT ARE PART OF THIS PROJECT. THE OWNER ACKNOWLEDGES PATTON TOWNSHIP'S RIGHT TO ACCESS THE PROJECT SITE WITH NOTICE TO REPAIR AND/OR MAINTAIN THE PERMANENT STORMWATER MANAGEMENT FACILITIES IN ACCORDANCE WITH THIS MAINTENANCE PROGRAM. ANY MAINTENANCE AND/OR REPAIR ACTIVITIES CONDUCTED BY PATTON TOWNSHIP SHALL BE AT THE EXPENSE OF THE OWNER.

THE FACILITIES THAT WILL REQUIRE MAINTENANCE ARE THE STORM SEWER INLETS, STORM PIPES, RIP RAP APRONS, AND INFILTRATION BASINS. ALL STORMWATER FACILITIES SHOULD BE INSPECTED VISUALLY EVERY TWO WEEKS OR IMMEDIATELY AFTER ANY RAINFALL PRODUCING RUNOFF OF 1" OR MORE OR SPECIFICALLY AS FOLLOWS:

1. THE STORM SEWER PIPES, ROOF DRAINS AND INLETS SHALL BE CLEANED OF ALL DEBRIS, LITTER, AND OTHER DELETERIOUS MATERIAL AFTER EACH STORM EVENT.
2. THE RIP-RAP APRONS AT THE OUTLETS OF THE PIPES NEED TO BE INSPECTED TO ENSURE PROPER EROSION PROTECTION. IF EROSION OCCURS, ADDITIONAL RIP-RAP SHOULD BE ADDED.
3. THE INFILTRATION BASINS SHALL MAINTAIN THICK VEGETATION. GRASSES WITHIN THE BOTTOM SHALL BE KEPT TO A MINIMUM 12" HEIGHT. PERIODIC MOWING OF GRASS IS ACCEPTABLE. INSPECT THE INFILTRATION BASIN PERIODICALLY AND HAVE ANY FOREIGN DEBRIS REMOVED. THE DESIGN DRAIN TIME FOR ALL INFILTRATION BASINS IS 72 HOURS. IF STANDING WATER PERSISTS, CONTACT A REGISTERED PROFESSIONAL, AS THE AMENDED TOPSOIL MAY NEED RE-EVALUATED FOR INFILTRATION CAPACITY OR BE RE-TILLED AND THE BOTTOM AREA RE-SEEDED WITH THE PROPOSED SEEDING MIXTURE.

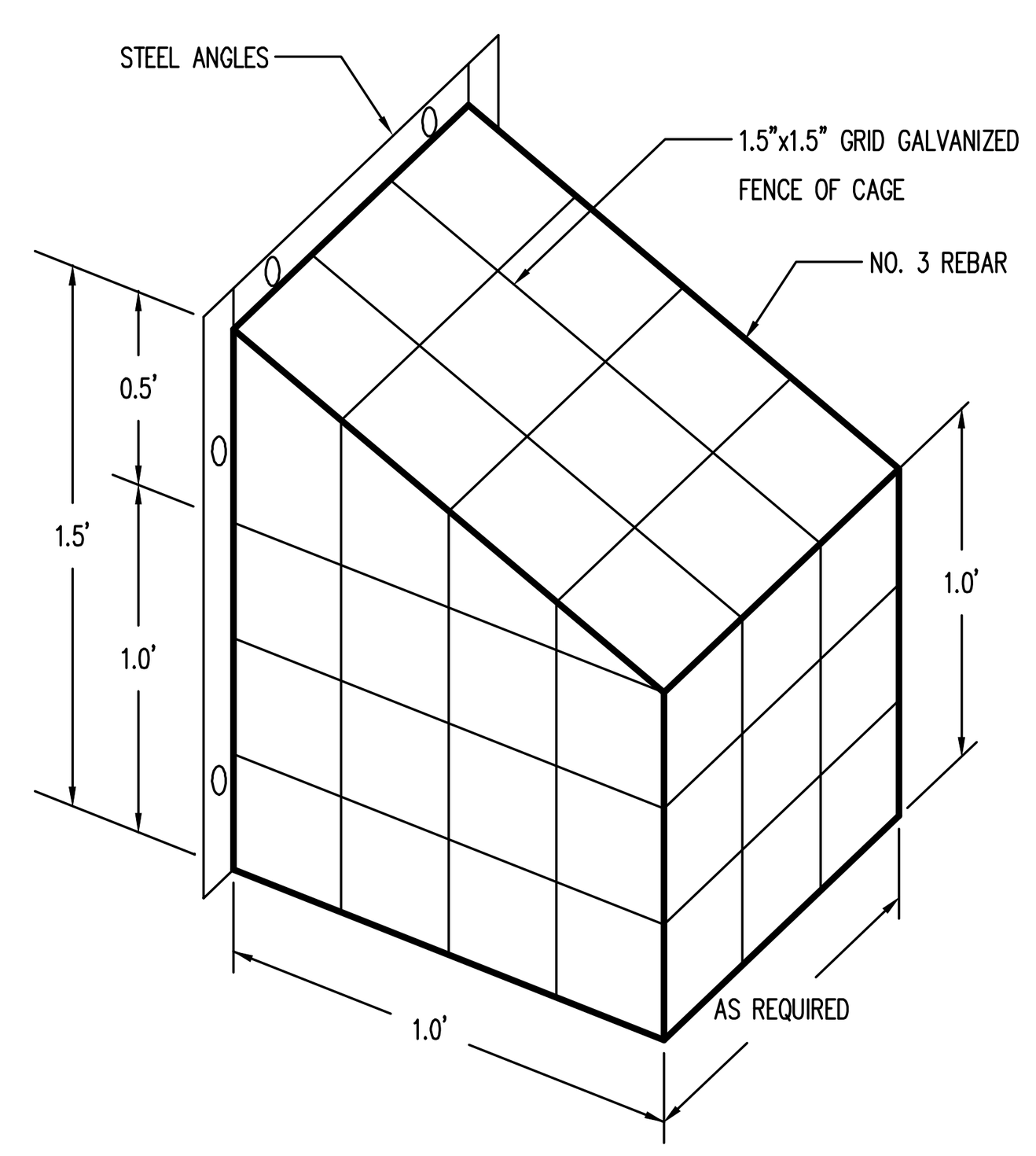

NOTE: PROVIDE CORROSION PROTECTION ON ALL METAL SURFACES

TRASH RACK

NOT TO SCALE

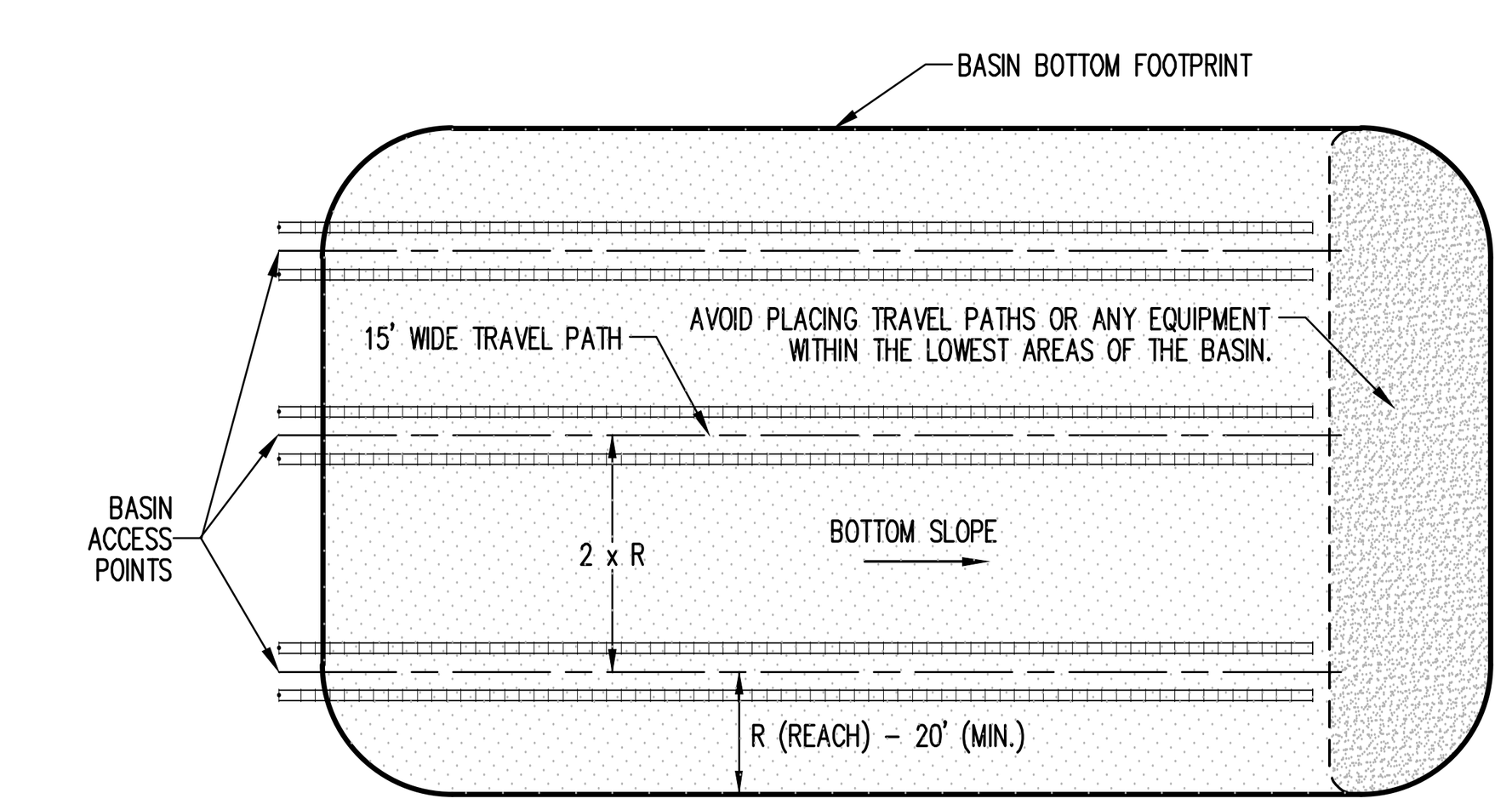

THIS DETAIL REPRESENTS A TYPICAL BASIN BOTTOM EXCAVATION TECHNIQUE. EACH BASIN VARIES WITH GEOMETRY AND OTHER VARIOUS PHYSICAL FEATURES. THE CONTRACTOR MUST DEVELOP A BASIN BOTTOM EXCAVATION PLAN AND CONSULT WITH THE SITE ENGINEER PRIOR TO COMMENCING THE BASIN BOTTOM EXCAVATION.

1. ALL EQUIPMENT MOBILIZATION AND MANEUVERS MUST BE LIMITED TO THE TRAVEL PATH LOCATIONS. THE CONTRACTOR SHALL LOCATE AND CLEARLY POST ALL TRAVEL PATHS IN THE FIELD.
2. TRAVEL PATH LOCATIONS SHALL BE SELECTED BASED UPON EQUIPMENT REACH CAPABILITY AND BASIN GEOMETRY. TRAVEL PATH LOCATIONS SHOULD BE SELECTED SUCH THAT THEY PARALLEL THE LONGEST SIDE OF THE BASIN.
3. TRAVEL PATH SPACING SHALL VARY WITH EQUIPMENT REACH CAPABILITY. REACH CAPABILITY SHOULD BE A MINIMUM OF 20 FEET.
4. MATERIAL SHALL BE REMOVED FROM THE TRAVEL PATH LOCATIONS WORKING TOWARD THE BASIN ACCESS POINTS. ONCE MATERIAL IS REMOVED FROM EACH TRAVEL PATH LOCATION AND FINAL GRADE IS ACHIEVED, ALL EQUIPMENT SHALL BE PROHIBITED FROM THESE LOCATIONS.
5. THIS PROCEDURE SHALL BE FOLLOWED FOR THE INITIAL SEDIMENT FACILITY CONSTRUCTION AND FINAL DETENTION BASIN GRADING. THE CONTRACTOR MUST USE THE SAME TRAVEL PATHS FOR BOTH CONSTRUCTION PHASES.

TYPICAL INFILTRATION BASIN BOTTOM EXCAVATION

NOT TO SCALE

PennTerra
ENGINEERING INC.

CENTRAL PENNSYLVANIA REGION OFFICE:
3075 ENTERPRISE DRIVE
SUITE 100
STATE COLLEGE, PA 16801
PH: 814-231-8285
Fax: 814-237-2308

LANCASTER REGION OFFICE:
3904 B ABEL DRIVE
COLUMBIA, PA 17512
PH: 717-522-5031
Fax: 717-522-5046

WWW.PENNTERRA.COM

COPYRIGHT 2021 BY THE ENGINEER
THE INFORMATION CONTAINED HEREON MAY NOT BE USED OR COPIED IN ANY MANNER WITHOUT THE WRITTEN PERMISSION OF THE ENGINEER EXCEPT AS OTHERWISE PROVIDED BY APPROPRIATE LAWS OR STATUTES.
© PENNTERRA ENGINEERING 2021 ALL RIGHTS RESERVED

COMMONWEALTH OF PENNSYLVANIA
REGISTERED PROFESSIONAL
C. ANTHONY FRUCHTL
ENGINEER
PE-062413

Designer EAH
Draftsman EAH
Proj.Manager CAF
Surveyor BRK
Perimeter Ck.
Book 463 Pg 1
File 19286.01-PCSMP-SWM-DETAILS-1
Layout SWM-DETAILS-1

Date Description
REVISIONS

TOFTREES PLANNED COMMUNITY WEST MOUNT NITTANY HEALTH OUTPATIENT CENTER

PATTON TOWNSHIP
CENTRE COUNTY
PENNSYLVANIA

FINAL LAND DEVELOPMENT PLAN

POST CONSTRUCTION STORMWATER MANAGEMENT DETAILS

PROJECT NO. 19286.01
DATE NOVEMBER 5, 2021
SCALE N.T.S.
SHEET NO. PC6

P:\ddtproj\2019\19286\19286.01 - Phase 1\Design\plot files\final plans\19286.01-PCSMP-SWM-DETAILS-1.dwg, 11/5/2021 11:22:52 AM, 1:1

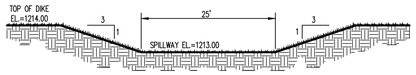

INFILTRATION BASIN #4 SPILLWAY DETAIL

NOT TO SCALE

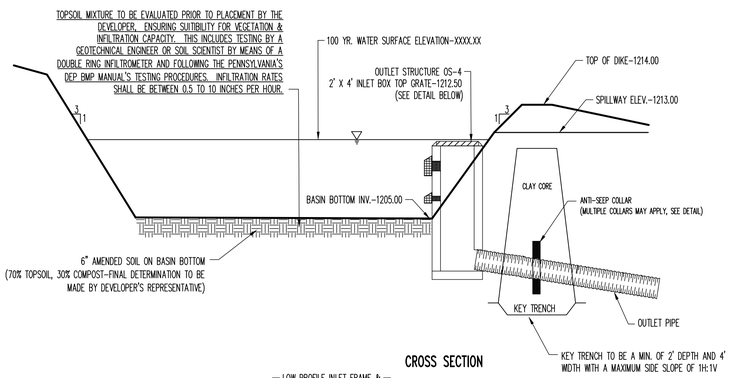

CROSS SECTION

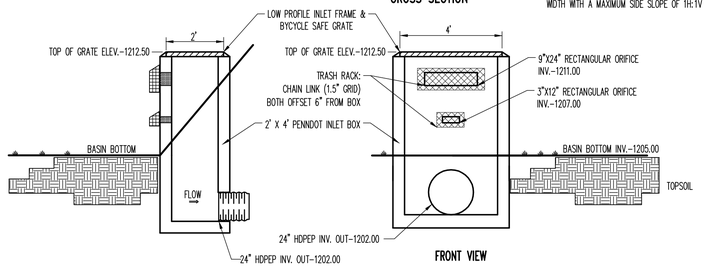

FRONT VIEW

OUTLET STRUCTURE DETAIL

INFILTRATION BASIN NOTES:

1. THE BASIN SHALL BE INSTALLED PRIOR TO OR CONCURRENT WITH ANY EARTH MOVING OR LAND DISTURBANCE WHICH IT WILL SERVE.
2. THE EMBANKMENT SHALL BE COMPACTED IN LAYERS TO A DENSITY OF 100% MAXIMUM DRY DENSITY AS DETERMINED BY ASTM D698.
3. THE EMBANKMENT SHALL BE CONSTRUCTED WITH SOIL THAT HAS LOW TO MODERATE ERODIBILITY (K FACTOR OF 32 OR LESS).
4. TEMPORARY AND PERMANENT GRASSES OR STABILIZATION MEASURES SHALL BE ESTABLISHED IN THE SIDES AND BASE OF ALL EARTHEN BASINS WITHIN 15 DAYS OF CONSTRUCTION.

INFILTRATION BASIN #4 DETAIL

NOT TO SCALE

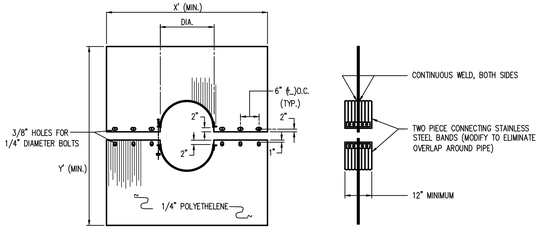

ELEVATION END VIEW

BASIN	DIA.	X	Y	NUMBER
1	2.00'	6.75'	6.75'	3
2	1.50'	5.50'	5.50'	2
3	1.50'	8.00'	8.00'	1
4	2.00'	9.00'	9.00'	2

ANTI-SEEP COLLAR

NOT TO SCALE

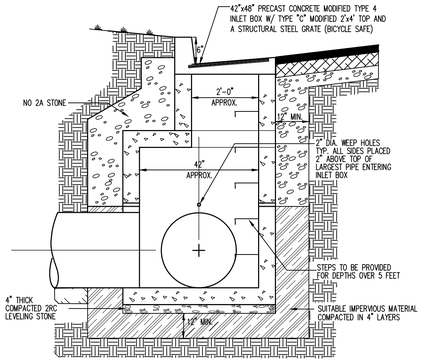

42"X48" PENNDOT PRECAST TYPE 4 BOX W/ 24 X 48 TYPE C TOP

NOT TO SCALE

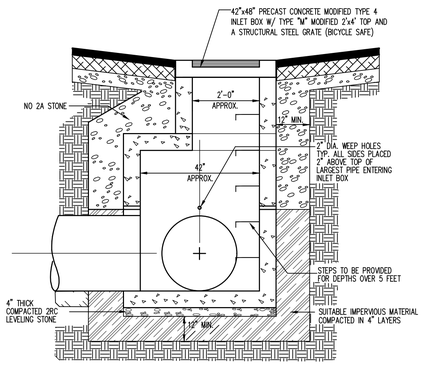

42"X48" PENNDOT PRECAST TYPE 4 BOX W/ 24 X 48 TYPE M TOP

NOT TO SCALE

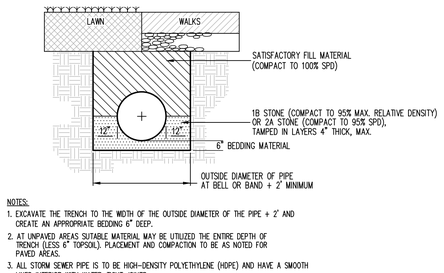

NOTES:

1. EXCAVATE THE TRENCH TO THE WIDTH OF THE OUTSIDE DIAMETER OF THE PIPE + 2' AND CREATE AN APPROPRIATE BEDDING 6" DEEP.
2. AT UNPAVED AREAS SUITABLE MATERIAL MAY BE UTILIZED THE ENTIRE DEPTH OF TRENCH (LESS 6" TOPSOIL). PLACEMENT AND COMPACTION TO BE AS NOTED FOR PAVED AREAS.
3. ALL STORM SEWER PIPE IS TO BE HIGH-DENSITY POLYETHYLENE (HDPE) AND HAVE A SMOOTH LINED INTERIOR WITH WATER-TIGHT JOINTS.
4. SATISFACTORY FILL MATERIAL: SOILS MEETING ASTM D2487 SOIL CLASSIFICATION GROUPS GW, GC, GM, SW, SC, SM, AND CL WITH LIQUID LIMIT NOT GREATER THAN 35, OR A COMBINATION OF THESE GROUPS; FREE OF ROCK OR GRAVEL LARGER THAN 3 INCHES IN ANY DIMENSION, DEBRIS, WASTE, FROZEN MATERIALS, VEGETATION, AND OTHER DELETERIOUS MATTER; WITHIN 3% OF OPTIMUM MOISTURE CONTENT. (INCLUDES 2A)
5. PLACE SATISFACTORY FILL MATERIAL IN LAYERS 8" THICK MAX. COMPACT TO 100% SPD.
6. OWNER WILL ENGAGE A QUALIFIED INDEPENDENT GEOTECHNICAL ENGINEERING TESTING AGENCY TO PERFORM FIELD QUALITY ASSURANCE TESTING. NOTIFY TESTING AGENCY AT LEAST 48 HOURS PRIOR TO FILL PLACEMENT ACTIVITIES. ALLOW TESTING AGENCY TO INSPECT AND TEST SUBGRADES AND EACH FILL OR BACKFILL LAYER. PROCEED WITH SUBSEQUENT EARTHWORK ONLY AFTER TEST RESULTS FOR PREVIOUSLY COMPLETED WORK COMPLY WITH REQUIREMENTS.

STORMSEWER (HDPE) INSTALLATION

NOT TO SCALE

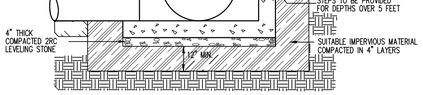

60"X60" PENNDOT PRECAST TYPE 5 BOX W/ 24 X 48 TYPE C TOP

NOT TO SCALE

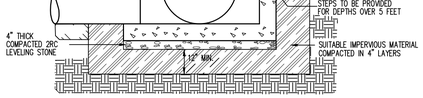

60"X60" PENNDOT PRECAST TYPE 5 BOX W/ 24 X 48 TYPE M TOP

NOT TO SCALE

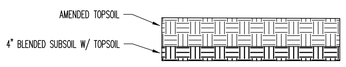

NOTES:

1. USE TILLING EQUIPMENT TO MIX AND BLEND TOPSOIL WITH THE SUBSOIL.
2. DO NOT OVERCOMPACT SUBSOIL/TOPSOIL LAYERS. MINIMIZE RUBBER TIRE VEHICULAR TRAFFIC AFTER PLACEMENT.
3. ALL INFILTRATION BASIN MUST UTILIZE TOPSOIL BLENDING TECHNIQUES.

INFILTRATION BASIN TOPSOIL BLENDING SPECIFICATION

NOT TO SCALE

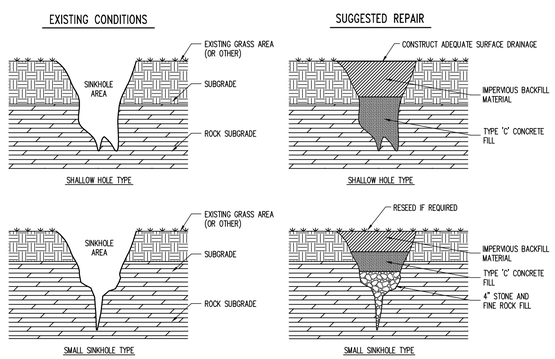

NOTE:
THESE DETAILS REPRESENT TYPICAL SINKHOLE SHAPES AND REPAIR TECHNIQUES. SINKHOLES VARY IN SIZE AND TYPE.
THEREFORE, THE OWNER'S GEOTECHNICAL ENGINEER SHALL BE CONTACTED PRIOR TO FIELD REPAIR OF ANY SINKHOLE.
(NOT INCLUDED IN UTILITY/EARTHWORK BASE BID)

SINKHOLE REPAIR

NOT TO SCALE

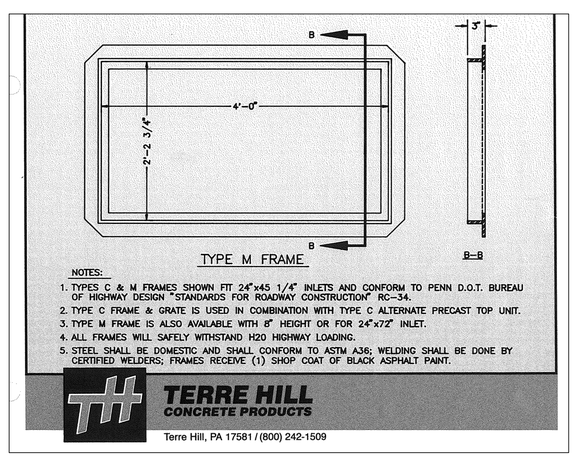

LOW PROFILE INLET FRAME DETAIL

NOT TO SCALE

PennTerra ENGINEERING INC.
CENTRAL PENNSYLVANIA REGION OFFICE:
3075 ENTERPRISE DRIVE
SUITE 100
STATE COLLEGE, PA 16801
PH: 814-231-8285
Fax: 814-237-2308
LANCASTER REGION OFFICE:
3904 B ABEL DRIVE
COLUMBIA, PA 17512
PH: 717-522-5031
Fax: 717-522-5046
WWW.PENNTERRA.COM

COPYRIGHT 2021 BY THE ENGINEER
THE INFORMATION CONTAINED HEREON MAY NOT BE USED OR COPIED IN ANY MANNER WITHOUT THE WRITTEN PERMISSION OF THE ENGINEER EXCEPT AS OTHERWISE PROVIDED BY APPROPRIATE LAWS OR STATUTES.
© PENNTERRA ENGINEERING 2021 ALL RIGHTS RESERVED

COMMONWEALTH OF PENNSYLVANIA REGISTERED PROFESSIONAL C. ANTHONY FRUCHTL ENGINEER PE-062413

Designer EAH
Draftsman EAH
Proj.Manager CAF
Surveyor BRK
Perimeter Ck.
Book 463 Pg 1
19286.01-PCSMP-SWM-DETAILS-2
Layout SWM-DETAILS-2

Date Description
REVISIONS

TOFTREES PLANNED COMMUNITY WEST MOUNT NITTANY HEALTH OUTPATIENT CENTER

PATTON TOWNSHIP
CENTRE COUNTY
PENNSYLVANIA

FINAL LAND DEVELOPMENT PLAN

POST CONSTRUCTION STORMWATER MANAGEMENT DETAILS

PROJECT NO.
19286.01
DATE
NOVEMBER 5, 2021
SCALE
N.T.S.
SHEET NO.
PC7

P:\ldotproj\2019\19286\19286.01 - Phase 1\Design\pw files\final plans\19286.01-PCSMP-SWM-DETAILS-2.dwg, 11/5/2021 11:23:07 AM, 1:1

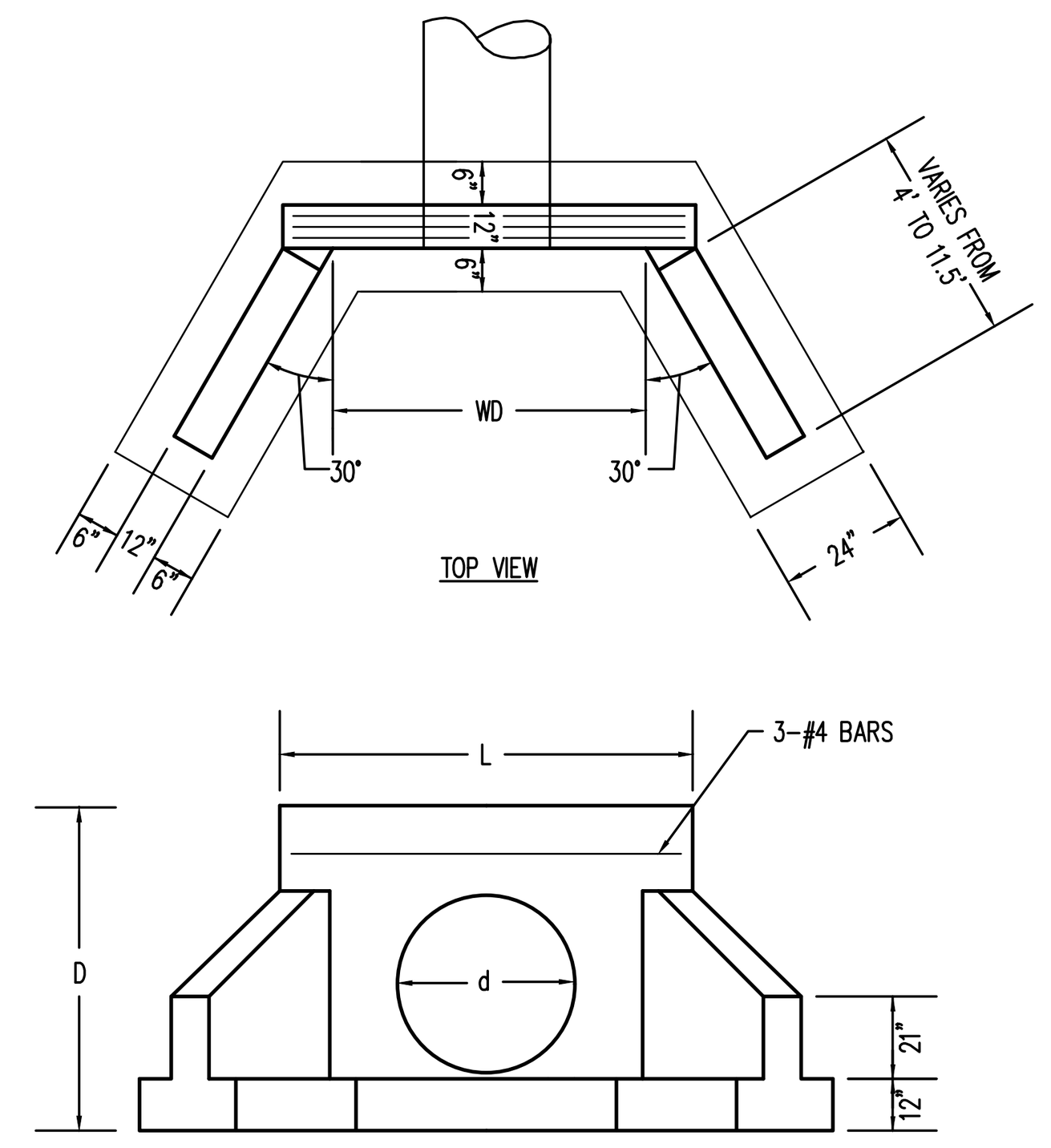

STRUCTURE	d	D	L	WD
OUT 6	4'	7.0'	6.9'	4'
OUT 8	4'	7.0'	6.9'	4'

*SEE PENNDOT RC STANDARD RC-31M FOR ACTUAL DIMENSIONS

PENNDOT TYPE 'D-W' ENDWALL
NOT TO SCALE

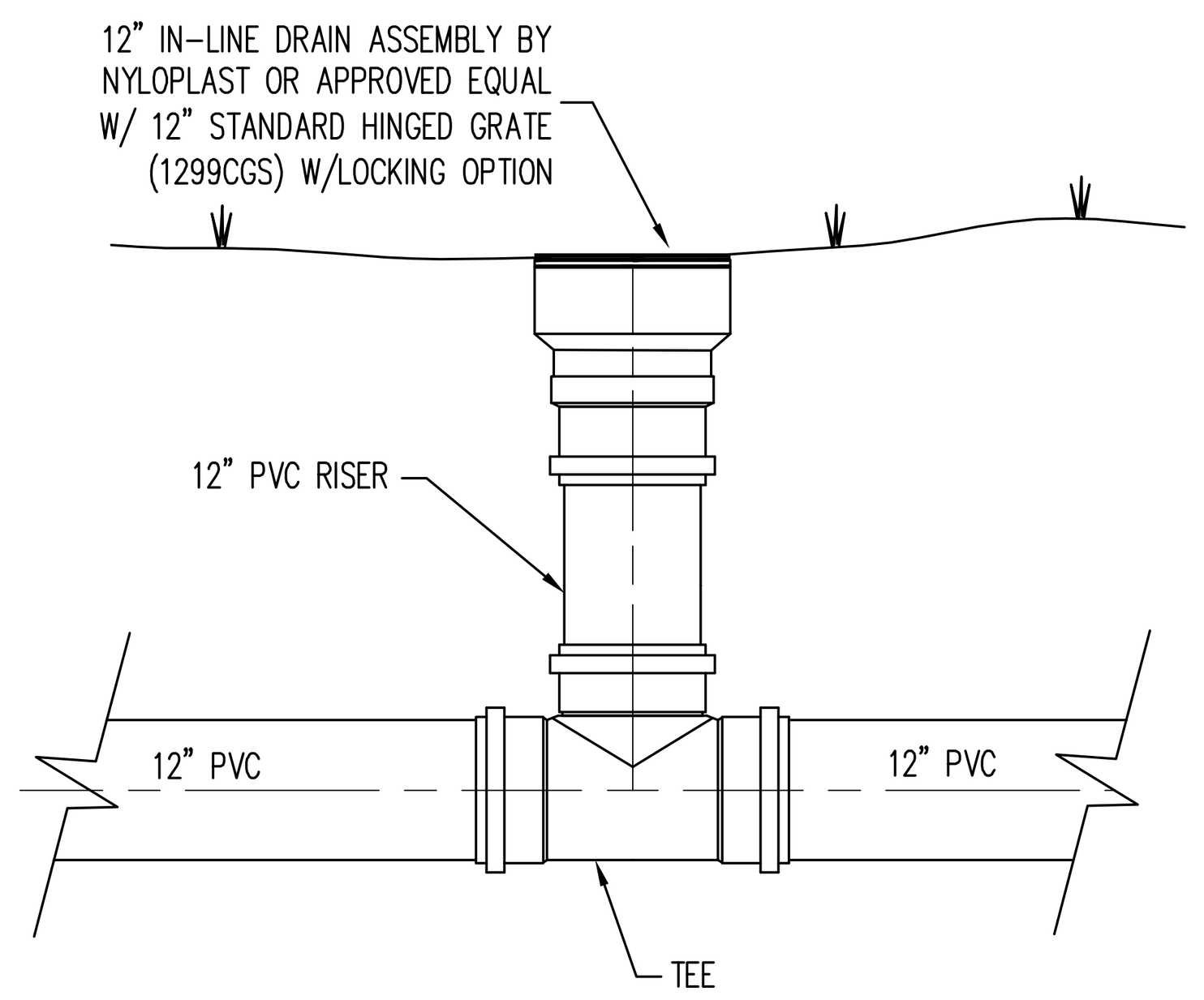

YARD DRAIN IN-LINE DRAIN ASSEMBLY
NOT TO SCALE

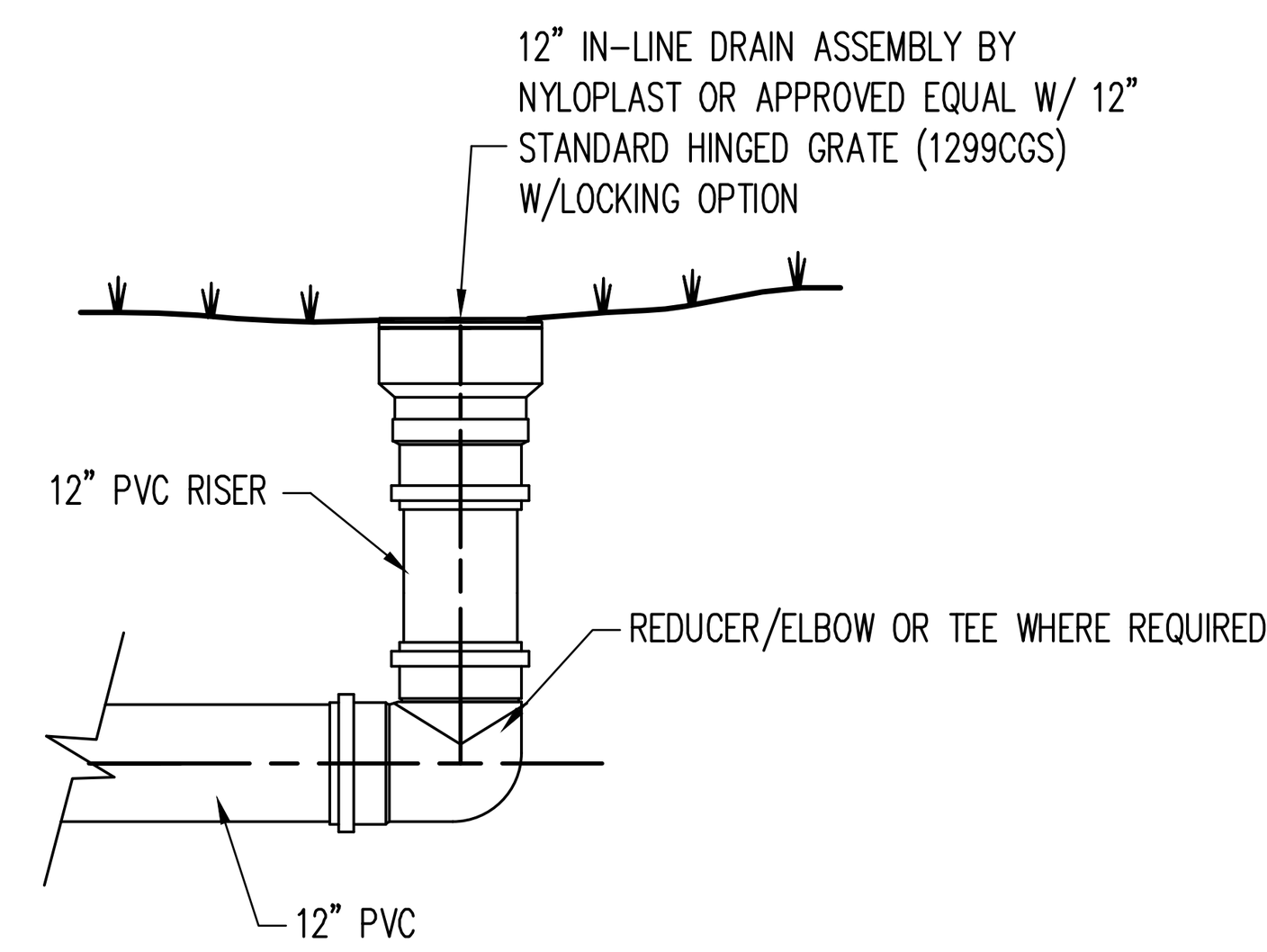

YARD DRAIN IN-LINE DRAIN ASSEMBLY
NOT TO SCALE

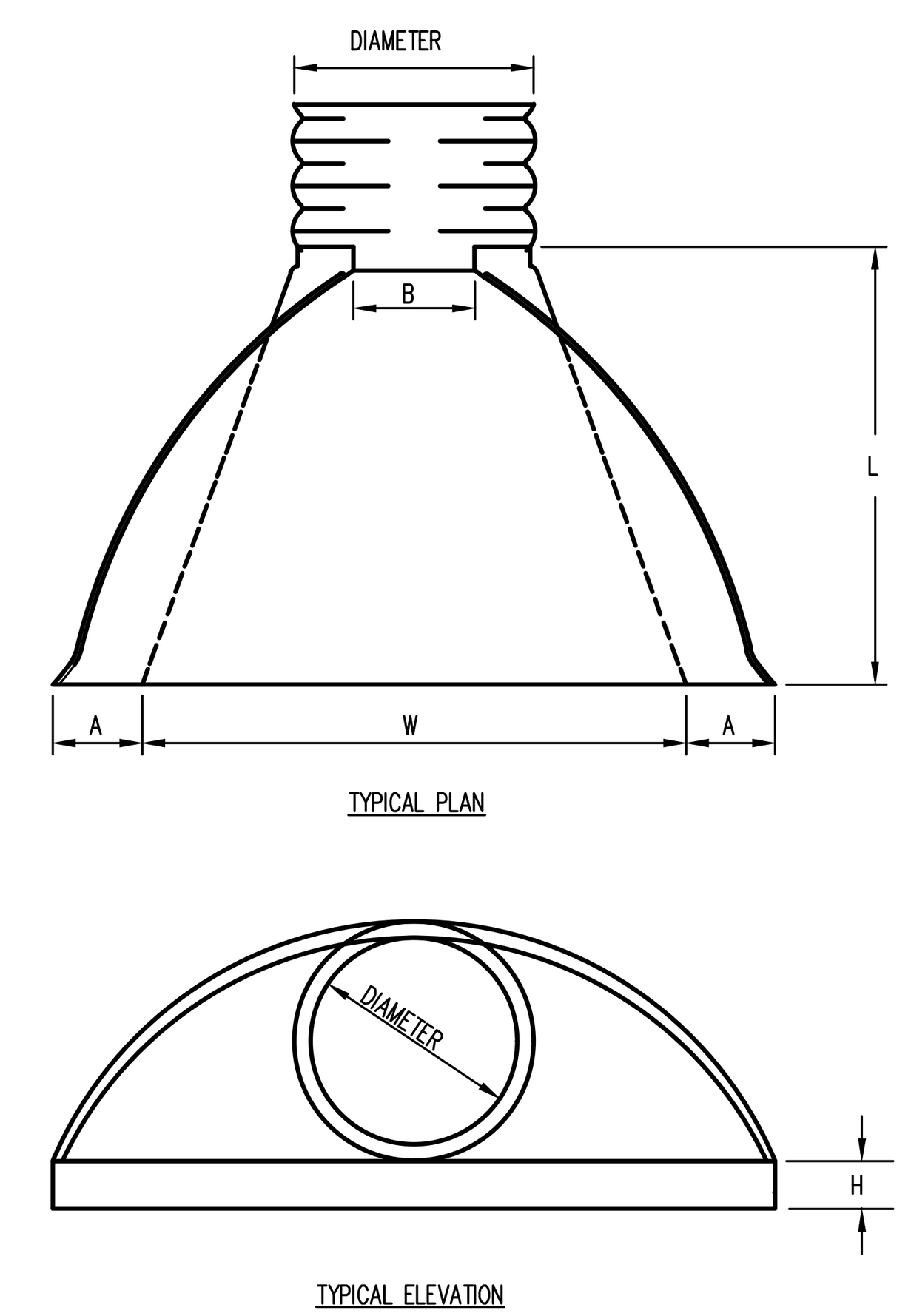

DIAM.	A (±1)	B (MAX)	H (±1)	L (± ½)	W (±2)
15"	6.5"	10"	6.5"	25"	29"
18"	7.5"	15"	6.5"	32"	35"
24"	7.5"	18"	6.5"	36"	45"

HDPEP END SECTION
NOT TO SCALE

SOIL AMENDMENTS

OPTION 1. SOIL AMENDMENT APPLICATION – PREMIXTURE WITH TOPSOIL (AREAS AT SUBGRADE AND LITTLE TO NO TOPSOIL IN PLACE)

A) SOIL AMENDMENT MEDIA CAN INCLUDE COMPOST, MULCH, MANURES, SAND, AND MANUFACTURED MICROBIAL SOLUTIONS.
B) PREPARE A MIXTURE OF TOPSOIL AND COMPOST AT A RATE OF 2:1 (TOPSOIL:COMPOST). IF A PROPRIETARY PRODUCT IS USED, THE MANUFACTURER'S INSTRUCTIONS SHOULD BE FOLLOWED IN TERMS OF MIXING AND APPLICATION RATE.
C) SOIL RESTORATION SHOULD NOT BE USED ON SLOPES GREATER THAN 30%. IN THESE AREAS, DEEP-ROOTED VEGETATION CAN BE USED TO INCREASE STABILITY.
D) SOIL RESTORATION SHOULD NOT TAKE PLACE WITHIN THE DRIP LINE OF A TREE TO AVOID DAMAGING THE ROOT SYSTEM.
E) ON-SITE SOILS WITH AN ORGANIC CONTENT OF AT LEAST 5 PERCENT CAN BE PROPERLY STOCKPILED (TO MAINTAIN ORGANIC CONTENT) AND REUSED.
F) SPREAD MIXTURE REFERENCED IN ITEM B. TO A MINIMUM DEPTH OF 6 INCHES OVER THE ENTIRE PROPOSED LAWN AREA.
G) THE SOIL AMENDMENT MIXTURE MUST NOT BE COMPACTED.

OPTION 2. SOIL AMENDMENT APPLICATION – PRESPREAD TOPSOIL (AREAS WITH EXISITING TOPSOIL IN PLACE)

A) SOIL AMENDMENT MEDIA CAN INCLUDE COMPOST, MULCH, MANURES, SAND, AND MANUFACTURED MICROBIAL SOLUTIONS.
B) COMPOST SHOULD BE ADDED AT A RATE OF 2:1 (SOIL:COMPOST). IF A PROPRIETARY PRODUCT IS USED, THE MANUFACTURER'S INSTRUCTIONS SHOULD BE FOLLOWED IN TERMS OF MIXING AND APPLICATION RATE.
C) SOIL RESTORATION SHOULD NOT BE USED ON SLOPES GREATER THAN 30%. IN THESE AREAS, DEEP-ROOTED VEGETATION CAN BE USED TO INCREASE STABILITY.
D) SOIL RESTORATION SHOULD NOT TAKE PLACE WITHIN THE DRIP LINE OF A TREE TO AVOID DAMAGING THE ROOT SYSTEM.
E) ON-SITE SOILS WITH AN ORGANIC CONTENT OF AT LEAST 5 PERCENT CAN BE PROPERLY STOCKPILED (TO MAINTAIN ORGANIC CONTENT) AND REUSED.
F) SPREAD 2 INCHES OF COMPOST ON THE EXISITNG TOPSOIL (PROPOSED LAWN AREA) AND TILL WITH A TILLER THAT IS SET TO A DEPTH OF 6 INCHES.
G) THE SOIL AMENDMENT MIXTURE MUST NOT BE COMPACTED.

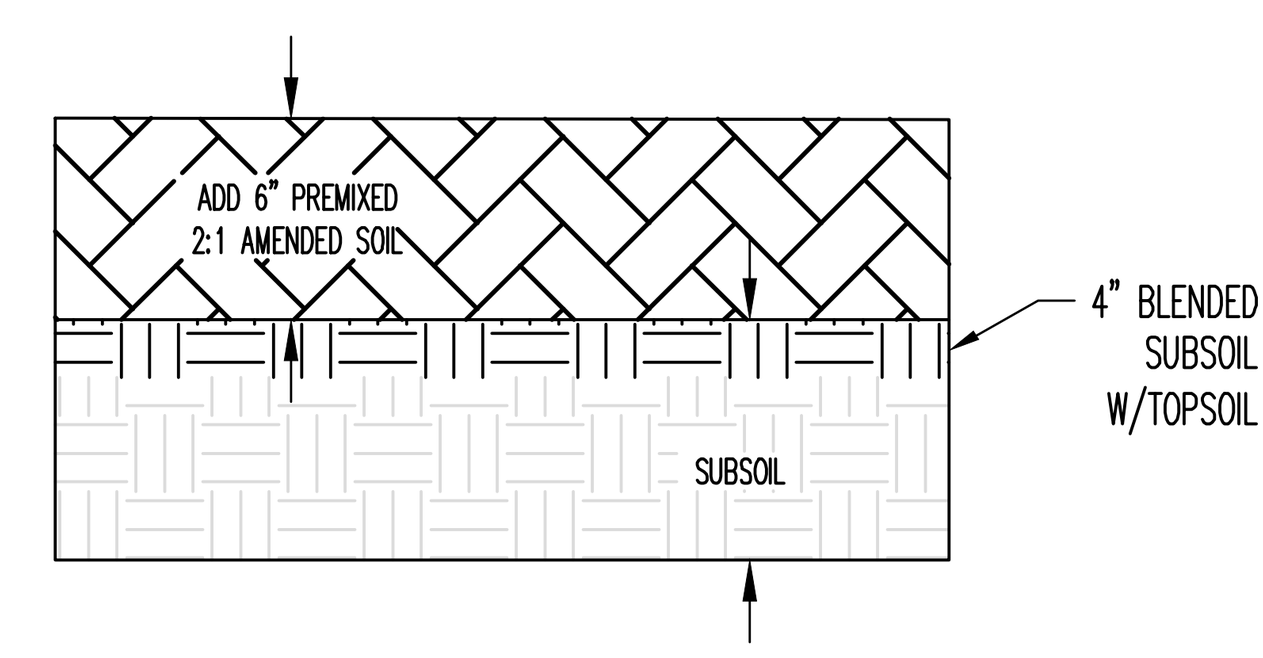

OPTION 1 – PREMIXED 2:1 AMENDED SOIL

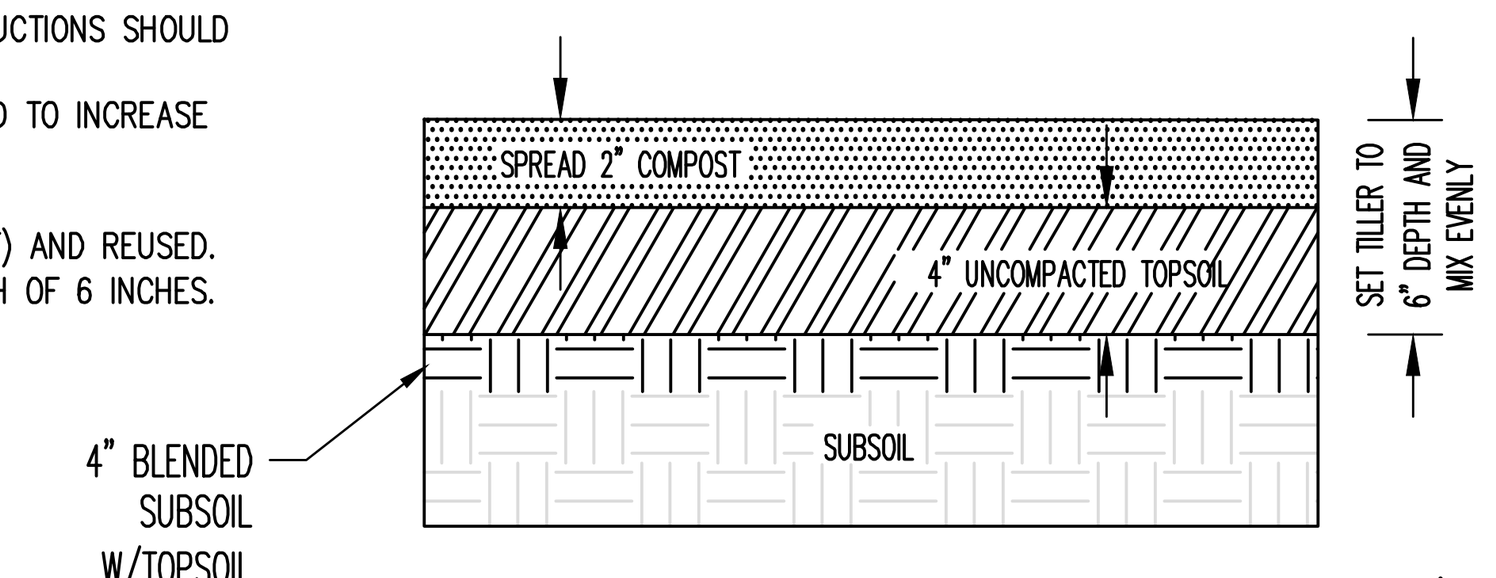

OPTION 2 – 2:1 AMENDED SOIL (CREATED IN PLACE)

SOIL AMENDMENT APPLICATION & INSTALLATION
NOT TO SCALE

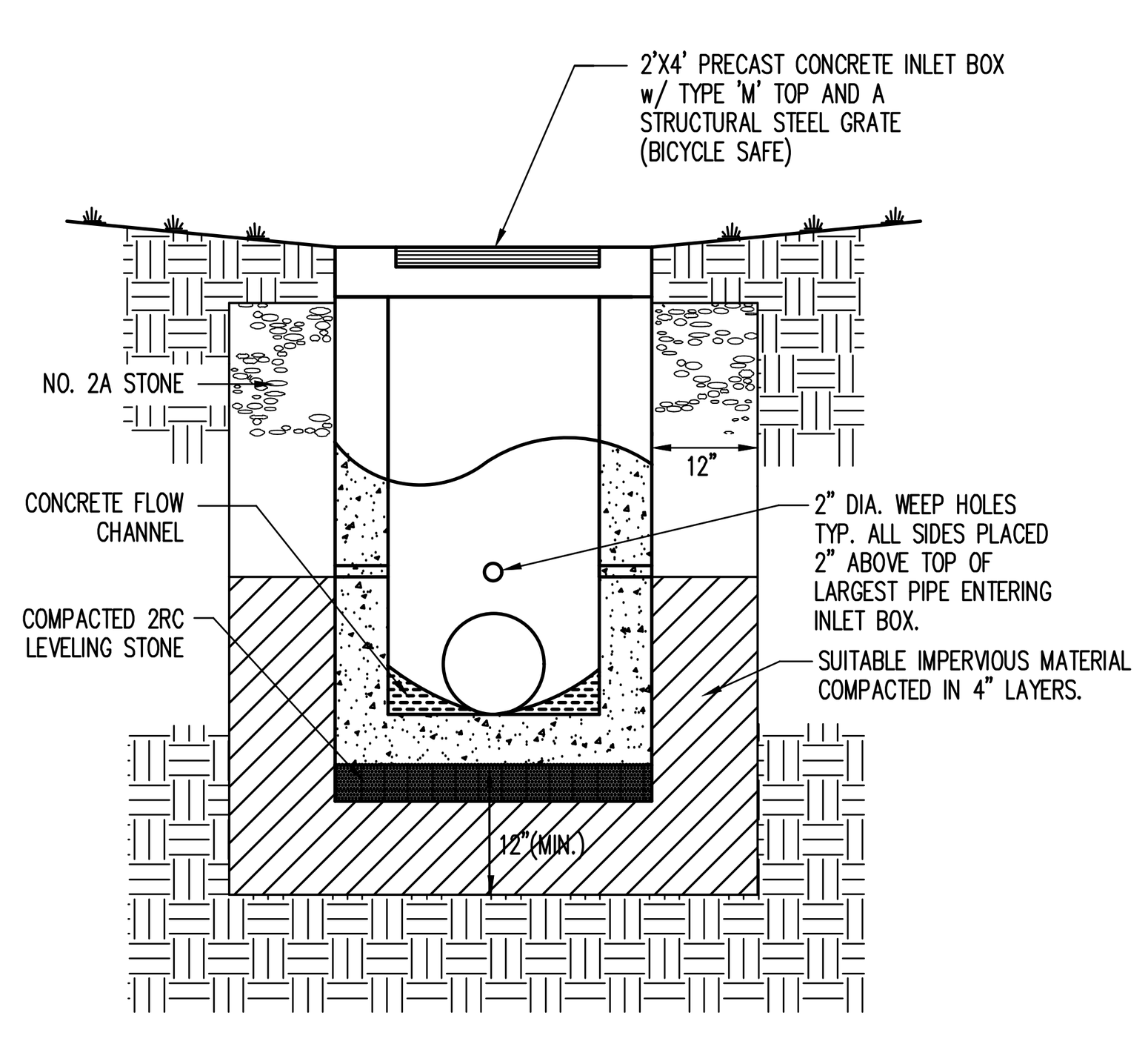

TYPE 'M' PRECAST CONCRETE INLET
NOT TO SCALE

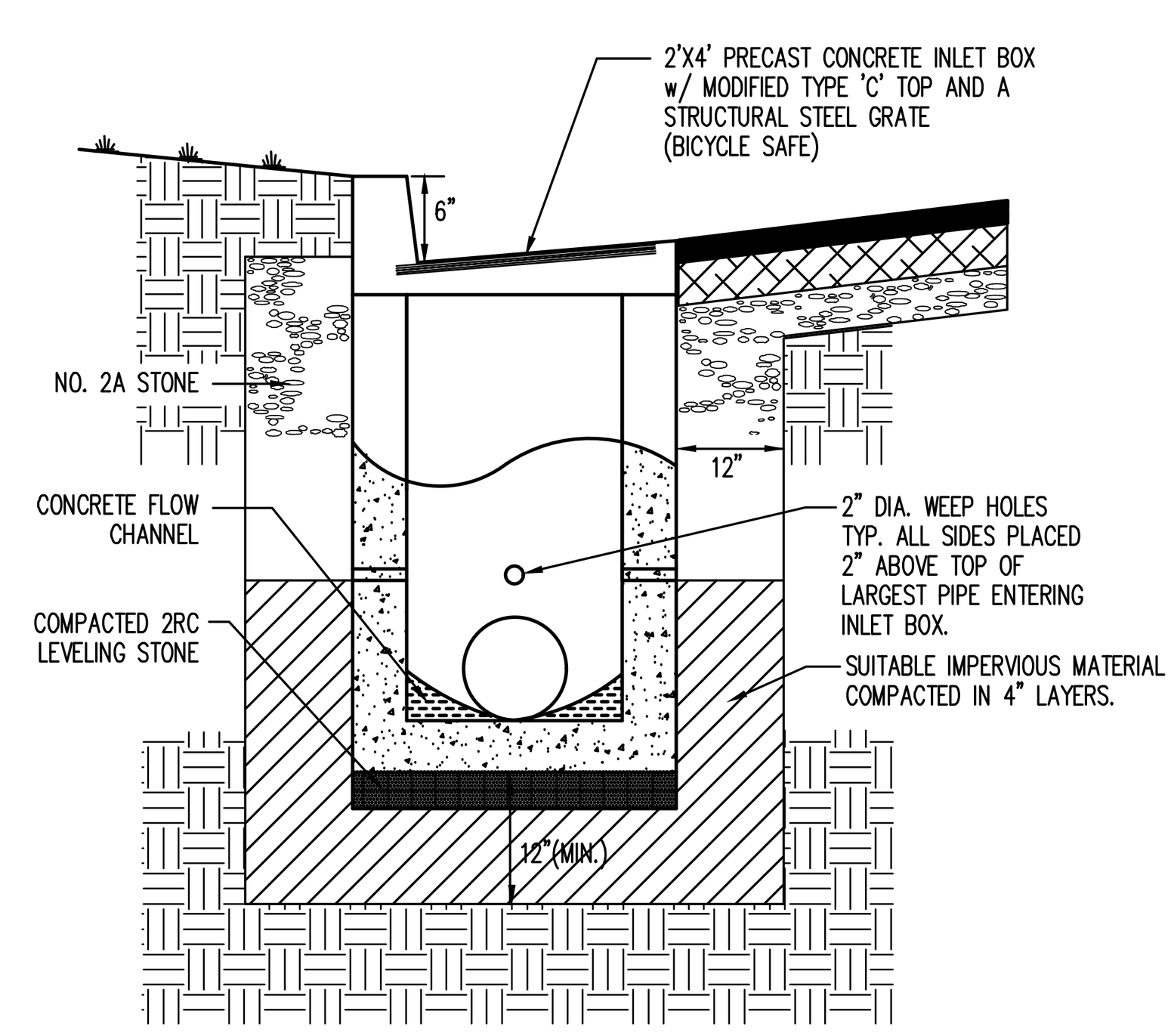

NOTE

Any Type 'C' Inlet exceeding 4' in depth is required to have steps installed.

MODIFIED TYPE 'C' PRECAST CONCRETE INLET
NOT TO SCALE

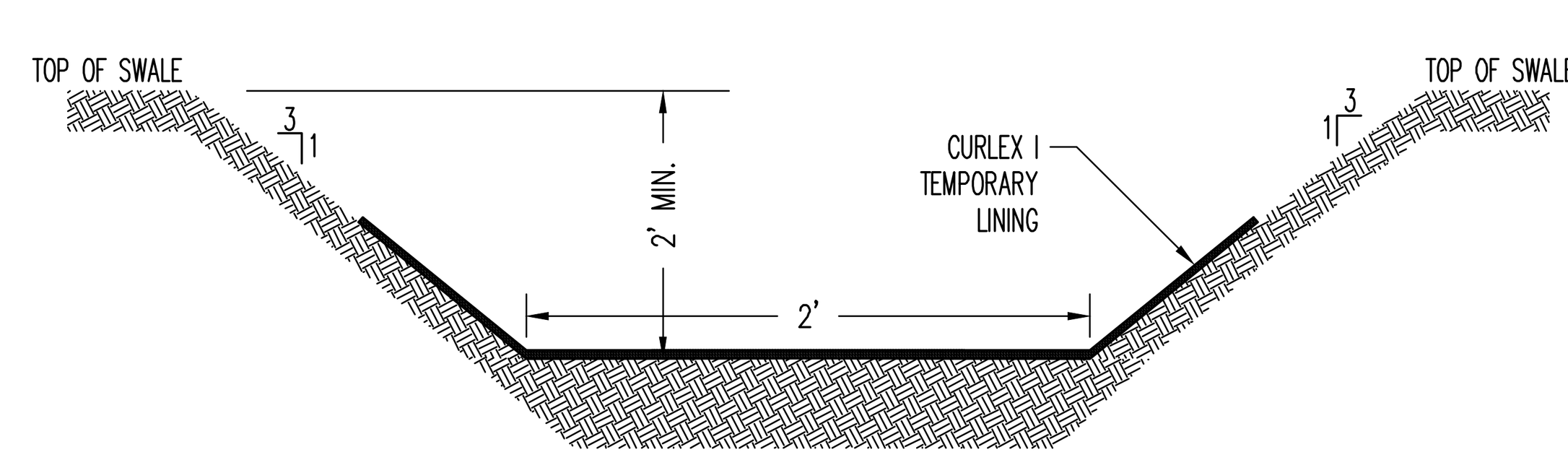

SWALE #1/#2 DETAIL
NOT TO SCALE

PERMANENT CONTROL MEASURES

PERMANENT CONTROL MEASURES INCLUDE THE BMP BASIN, UNDERGROUND STORMWATER FACILITIES, STORM SEWER SYSTEMS, RIPRAP APRONS, CURBING AND SEEDING / LANDSCAPING. SEEDING SPECIFICATIONS ARE FOR GRADED OR CLEARED AREAS WHERE PERMANENT VEGETATIVE COVER IS NEEDED.

SOIL ENHANCEMENTS: IT IS RECOMMENDED THAT SITE SPECIFIC SOIL TESTING BE PERFORMED. LIEU OF SOIL TEST RECOMMENDATIONS, USE ONE OF THE FOLLOWING SCHEDULES:

ACCEPTABLE – APPLY 6 TONS PER ACRE DOLOMITIC LIMESTONE (240 LBS/ 1000 S.F.) AND 1000 LBS/ACRE 10-20-20 (25 LBS/ 1000 S.F.) BEFORE SEEDING. HARROW OR DISC INTO UPPER THREE INCHES OF SOIL.

PERMANENT SITE SEEDING SHALL CONSIST OF THE FOLLOWING:

ITEM		RATE
1.	SEED MIXTURE CONSISTS OF:	
	50% POA PRATENSIS (KENTUCKY BLUEGRASS)	
	30% FESTUCA RUBRA (CREEPING RED FESCUE)	
	20% LOLIUM PERENNE L. (PERENNIAL RYE)	102 LBS. / ACRE
2.	MULCH/STRAW	3 TONS / ACRE

PERMANENT INFILTRATION BASIN BOTTOM SEEDING MIX SHALL CONSIST OF THE FOLLOWING:

1. Seed Mixture Consisting of:
   - 20% Elymus virginicus, (Virginia Wildrye, PA Ecotype) — Rate 20-40 lbs / acre
   - 20% Puccinellia distans (Alkaligrass)
   - 17% Panicum clandestinum (Deertongue)
   - 17% Carex vulpinoidea (Fox Sedge, PA Ecotype)
   - 14% Agrostis stolonifera (Creeping Bentgrass)
   - 4% Agrostis scabra (Ticklegrass, PA Ecotype)
   - 4% Agrostis perennans (Autumn Bentgrass, PA Ecotype)
   - 3% Juncus effusus (Soft Rush)
   - 1% Juncus tenuis (Path Rush, PA Ecotype)
2. Mulch: 3 tons / acre

*MULCHING: APPLY MULCH IMMEDIATELY AFTER SEEDING AND ANCHOR PROPERLY WITH AN ANCHORING TOOL OR FOLLOWING ONE OF THE METHODS LISTED BELOW.

1) TRACKING: THE PROCESS OF CUTTING MULCH INTO THE SOIL VIA EQUIPMENT THAT RUNS ON TRACKS, IS EMPLOYED PRIMARILY ON SLOPES 3:1 OR STEEPER.
2) MULCH NETTINGS: STAPLE LIGHTWEIGHT BIODEGRADABLE PAPER, PLASTIC OR COTTON NETTING OVER THE MULCH ACCORDING TO THE MANUFACTURER'S RECOMMENDATIONS.
3) SYNTHETIC BINDERS: SYNTHETIC BINDERS SUCH AS ACRYLIC DLR (AGRI-TAC), DCA-70, PETROSET OR TERRATACK MAY BE USED AT RATES RECOMMENDED BY THE MANUFACTURER TO ANCHOR MULCH MATERIAL.
4) WOOD CELLULOSE FIBER: THE FIBER BINDER SHALL BE APPLIED AT A NET DRY WEIGHT OF 750 LB/ACRE. THE WOOD CELLULOSE FIBER SHALL BE MIXED WITH WATER, AND THE MIXTURE SHALL CONTAIN A MAXIMUM OF 50 LBS OF WOOD CELLULOSE FIBER PER 100 GALLONS.
5) PEG & TWINE: DRIVE 8 TO 10 INCH WOODEN PEGS TO WITHIN 2 TO 3 INCHES OF THE SOIL SURFACE EVERY 4 FEET IN ALL DIRECTIONS. STAKES MAY BE DRIVEN BEFORE OR AFTER APPLYING MULCH. SECURE MULCH TO SURFACE BY STRETCHING TWINE BETWEEN PEGS IN A CRISS-CROSS WITHIN A SQUARE PATTERN. SECURE TWINE AROUND EACH PEG WITH TWO OR MORE TURNS.

RECYCLING AND DISPOSAL OF MATERIALS

THE OPERATOR SHALL REMOVE FROM THE SITE, RECYCLE, OR DISPOSE OF ALL BUILDING MATERIALS AND WASTES IN ACCORDANCE WITH THE DEPARTMENT'S SOLID WASTE MANAGEMENT REGULATIONS AT 25 PA. CODE 260.1ET SEQ., 271.1 ET SEQ., AND 287.1 ET SEQ. THE CONTRACTOR SHALL NOT ILLEGALLY BURY, DUMP, OR DISCHARGE ANY BUILDING MATERIAL OR WASTES.

WASTES GENERATED DURING THE CONSTRUCTION OF THIS PROJECT SHALL BE RECYCLED IF AT ALL POSSIBLE. ANY MATERIALS THAT CANNOT BE RECYCLED OR REUSED SHALL BE DISPOSED OF AT A PENNSYLVANIA DEPARTMENT OF ENVIRONMENTAL PROTECTION APPROVED LANDFILL. IF SOIL AND/OR ROCK DISPOSAL AREAS ARE REQUIRED, EROSION AND SEDIMENTATION CONTROLS SHALL BE IMPLEMENTED AT THESE AREAS. ANY EXCESS SOIL WASTE MAY ONLY BE DISPOSED OF AT AN APPROVED E&S/NPDES PERMITTED SITE.

RESPONSIBILITIES FOR FILL MATERIALS

THE CONTRACTOR IS RESPONSIBLE TO USE ENVIRONMENTAL DUE DILIGENCE TO ENSURE ANY FILL MATERIAL REQUIRED TO BE IMPORTED TO OR EXPORTED FROM THE SITE QUALIFIES AS CLEAN FILL.

CLEAN FILL IS DEFINED AS: UNCONTAMINATED, NON-WATER SOLUBLE, NON-DECOMPOSABLE, INERT, SOLID MATERIAL. THE TERM INCLUDES SOIL, ROCK, STONE, DREDGED MATERIAL, USED ASPHALT, AND BRICK, BLOCK OR CONCRETE FROM CONSTRUCTION AND DEMOLITION ACTIVITIES THAT IS SEPARATE FROM OTHER WASTE AND IS RECOGNIZABLE AS SUCH. THE TERM DOES NOT INCLUDE MATERIALS PLACED IN OR ON THE WATERS OF THE COMMONWEALTH UNLESS OTHERWISE AUTHORIZED. (THE TERM "USED ASPHALT" DOES NOT INCLUDE MILLED ASPHALT OR ASPHALT THAT HAS BEEN PROCESSED FOR RE-USE.)
ENVIRONMENTAL DUE DILIGENCE: INVESTIGATIVE TECHNIQUES, INCLUDING, BUT NOT LIMITED TO, VISUAL PROPERTY INSPECTIONS, ELECTRONIC DATA BASE SEARCHES, REVIEW OF PROPERTY OWNERSHIP, REVIEW OF PROPERTY USE HISTORY, SANBORN MAPS, ENVIRONMENTAL QUESTIONNAIRES, TRANSACTION SCREENS, ANALYTICAL TESTING, ENVIRONMENTAL ASSESSMENTS OR AUDITS. ANALYTICAL TESTING IS NOT A REQUIRED PART OF DUE DILIGENCE UNLESS VISUAL INSPECTION AND/OR REVIEW OF THE PAST LAND USE OF THE PROPERTY INDICATES THAT THE FILL MAY HAVE BEEN SUBJECTED TO A SPILL OR RELEASE OF REGULATED SUBSTANCE. IF THE FILL MAY HAVE BEEN AFFECTED BY A SPILL OR RELEASE OF A REGULATED SUBSTANCE, IT MUST BE TESTED TO DETERMINE IF IT QUALIFIES AS CLEAN FILL. TESTING SHOULD BE PERFORMED IN ACCORDANCE WITH APPENDIX A OF THE DEPARTMENT'S POLICY "MANAGEMENT OF FILL".

POST CONSTRUCTION EARTHMOVING ACTIVITIES

NOTES:

1.) IN ORDER TO AVOID COMPACTION OF THE INFILTRATION BASIN BOTTOM WHILE REMOVING SEDIMENT, SPECIAL PROCEDURES SHALL BE IMPLEMENTED FOR EQUIPMENT OPERATIONS WITHIN THE FINAL THREE FEET OF THE BASIN BOTTOM EXCAVATION.

A. ONCE EXCAVATION OF THE INFILTRATION BASIN BOTTOM IS BROUGHT TO WITHIN THREE FEET OF FINAL GRADE, THE FINAL EXCAVATION SHALL BE COMPLETED UTILIZING EQUIPMENT LOCATED OUTSIDE THE BOTTOM (IF EXCAVATION CANNOT FULLY BE COMPLETED FROM OUTSIDE THE BOTTOM, REFER TO THE TYPICAL BASIN BOTTOM EXCAVATION DETAIL.)

SEQUENCE:

INFILTRATION BASIN#1/SEDIMENT BASIN FINAL CONVERSION

1. REMOVE ALL SEDIMENTS (IN ACCORDANCE WITH GENERAL SITE NOTE #3 ABOVE) AND CONSTRUCT THE BASIN TO THE FINAL GRADE AS SHOWN ON THE POST CONSTRUCTION STORMWATER MANAGEMENT (PCSM) GRADING PLANS.
2. REMOVE SKIMMER DEVICE, BAFFLES AND MODIFY OUTLET STRUCTURE AND EMERGENCY SPILLWAY TO PCSM OUTLET CONFIGURATION.
3. PLACE A MINIMUM OF 6" OF AMENDED TOPSOIL WITHIN THE BASIN BOTTOM AREA. A LICENSED SOIL SCIENTIST SHALL APPROVE THE AMENDED TOPSOIL MIXTURE AND SUBGRADE. PLACE SPECIFIC BASIN BOTTOM PERMANENT SEEDING AND OTHER PERMANENT SEEDING MIXTURES ON SIDE SLOPES WHERE NECESSARY.

OVERALL CONSTRUCTION NOTES:

ANY AREA DESIGNATED FOR SOIL AMENDMENTS OR RESTORATION SHALL BE DESIGNED AND CONSTRUCTED IN ACCORDANCE WITH PA. STORMWATER BEST MANAGEMENT PRACTICES (BMP) MANUAL, BMP 6.7.3 "SOILS AMENDMENT AND RESTORATION".

ALL BMPS USED FOR INFILTRATION/WATER QUALITY TREATMENT SHALL UTILIZE AN AMENDED SOIL LAYER FOR ENHANCED POLLUTANT REMOVAL. CONSTRUCTION VEHICLES WILL NOT ENTER THE AREA BEYOND THE LIMITS OF DISTURBANCE PROTECTED BY THE TEMPORARY FENCE, EXCEPT THAT LOW GROUND PRESSURE EQUIPMENT LIMITED TO TRACK EQUIPPED SKID STEER CAN BE USED TO INSTALL THE LANDSCAPING AS SHOWN ON THE FINAL PRD PLAN. ANY AREA PROTECTED BY TEMPORARY FENCE WHERE THIS CONDITION IS VIOLATED WILL HAVE SOIL RESTORATIVE TECHNIQUES PERFORMED IN ACCORDANCE WITH THE PENNSYLVANIA STORMWATER BMP MANUAL SECTION 6.7.3, PRIOR TO LANDSCAPING CONSTRUCTION VEHICLES WILL NOT ENTER THE AREA BETWEEN THE EDGES OF THE FILL SLOPES THAT FLANK EACH SIDE OF THE DRAINAGE WAY AS SHOWN ON PLAN SHEETS 7, 8 AND 9 WITH THE FOLLOWING EXCEPTIONS:

1. AS MINIMALLY NECESSARY TO CONSTRUCT THE FILL SLOPES.
2. AS NECESSARY TO INSTALL TEMPORARY SILT SOCK FOR EROSION CONTROL MEASURES.
3. AS NECESSARY TO CONSTRUCT THE PROPOSED BLUE COURSE DRIVE EXTENSION AND ASSOCIATED IMPROVEMENTS.
4. AS NECESSARY TO INSTALL THE LANDSCAPING

NOTE: ALL AMENITY AREA ROOF DRAINS ARE TO BE 8" PVC PIPE @ 1.0% MINIMUM SLOPE.
YARD DRAINS (YD) ARE TO BE 8"ø RISERS WITH FLUSH H-20 GRATES

PennTerra ENGINEERING INC.

CENTRAL PENNSYLVANIA REGION OFFICE:
3075 ENTERPRISE DRIVE
SUITE 100
STATE COLLEGE, PA 16801
PH: 814-231-8285
Fax: 814-237-2308

LANCASTER REGION OFFICE:
3904 B ABEL DRIVE
COLUMBIA, PA 17512
PH: 717-522-5031
Fax: 717-522-5046

WWW.PENNTERRA.COM

COPYRIGHT 2021 BY THE ENGINEER
THE INFORMATION CONTAINED HEREON MAY NOT BE USED OR COPIED IN ANY MANNER WITHOUT THE WRITTEN PERMISSION OF THE ENGINEER EXCEPT AS OTHERWISE PROVIDED BY APPROPRIATE LAWS OR STATUTES.
© PENNTERRA ENGINEERING 2021 ALL RIGHTS RESERVED

COMMONWEALTH OF PENNSYLVANIA REGISTERED PROFESSIONAL C. ANTHONY FRUCHTL ENGINEER PE-062413

Designer	EAH
Draftsman	EAH
Proj.Manager	CAF
Surveyor	BRK
Perimeter Ck.	
Book	463 Pg 1
File	19286.01-PCSMP-SWM-DETAILS-3
Layout	ES-DETAILS-3

Date	Description

REVISIONS

TOFTREES PLANNED COMMUNITY WEST MOUNT NITTANY HEALTH OUTPATIENT CENTER

PATTON TOWNSHIP
CENTRE COUNTY
PENNSYLVANIA

FINAL LAND DEVELOPMENT PLAN

POST CONSTRUCTION STORMWATER MANAGEMENT DETAILS

PROJECT NO. 19286.01

DATE NOVEMBER 5, 2021

SCALE N.T.S.

SHEET NO. PC8

P:\ddtproj\2019\19286\19286.01 - Phase 1\Design\plot files\final plans\19286.01-PCSMP-SWM-DETAILS-3.dwg, 11/5/2021 11:23:26 AM, 1:1

PROPOSED STORM DRAIN STRUCTURE DATA

ID	STRUCTURE Type	TG ELEV	INVERT IN		INVERT OUT	PIPE RUN PIPE TYPE		LENGTH (FT)	SIZE (IN)	SLOPE (%)
OUT-8	CONCRETE HEADWALL		1192.00							
I-10	24" X 48" Precast Type C Modified Inlet w/ Bicycle Safe Grate	1217.58	1206.54	I-11	1206.44	I-10 TO OUT-8	HDPEP	117.5	36	12.29
I-11	60" X 60" Precast Inlet Box w/ Type M Modified Inlet w/ Bicycle Safe Grate	1216.85	1209.80	I-12	1209.70	I-11 TO I-10	HDPEP	31.0	36	10.19
I-12	42" X 48" Precast Inlet Box w/ Type C Modified Inlet w/ Bicycle Safe Grate	1219.40	1211.60	I-13	1211.50	I-12 TO I-11	HDPEP	31.7	36	5.36
			1213.10	I-17						
I-13	42" X 48" Precast Inlet Box w/ Type C Modified Inlet w/ Bicycle Safe Grate	1235.60	1227.00	I-14	1226.90	I-13 TO I-12	HDPEP	356.0	36	4.30
			1230.65	I-18						
I-14	42" X 48" Precast Inlet Box w/ Type C Modified Inlet w/ Bicycle Safe Grate	1245.90	1237.40	I-14A						
			1236.90	I-15	1235.90	I-14 TO I-13	HDPEP	389.3	36	2.29
			1236.40	I-19						
I-14A	24" X 48" Precast Type C Modified Inlet w/ Bicycle Safe Grate	1242.78	1238.30	I-14B	1238.20	I-14A TO I-14	HDPEP	147.5	18	0.54
I-14B	24" X 48" Precast Type C Modified Inlet w/ Bicycle Safe Grate	1242.80	1238.80			I-14B TO I-14A	HDPEP	28.8	18	1.74
I-15	42" X 48" Precast Inlet Box w/ Type C Modified Inlet w/ Bicycle Safe Grate	1249.80	1243.25	I-16	1243.15	I-15 TO I-14	HDPEP	183.5	24	3.41
I-16	42" X 48" Precast Inlet Box w/ Type C Modified Inlet w/ Bicycle Safe Grate	1249.90		FUTURE	1243.98	I-16 TO I-15	HDPEP	32.1	24	2.27
I-17	24" X 48" Precast Type C Modified Inlet w/ Bicycle Safe Grate	1219.40	1214.40	HW-4	1214.30	I-17 TO I-12	HDPEP	40.0	18	3.00
I-18	24" X 48" Precast Type C Modified Inlet w/ Bicycle Safe Grate	1235.60			1231.85	I-18 TO I-13	HDPEP	40.0	15	3.00
I-19	42" X 48" Precast Inlet Box w/ Type C Modified Inlet w/ Bicycle Safe Grate	1244.70	1238.82	I-20	1238.32	I-19 TO I-14	HDPEP	66.7	30	2.88
			1239.32	I-24						
I-20	42" X 48" Precast Inlet Box w/ Type C Modified Inlet w/ Bicycle Safe Grate	1253.46	1246.00	I-21	1245.90	I-20 TO I-19	HDPEP	215.8	24	3.28
I-21	24" X 48" Precast Type C Modified Inlet w/ Bicycle Safe Grate	1253.70	1247.60	I-22	1247.10	I-21 TO I-20	HDPEP	33.5	24	3.28
			1247.20	I-21A						
I-21A	24" X 48" Precast Type C Modified Inlet w/ Bicycle Safe Grate	1252.82			1247.50	I-21A TO I-21	HDPEP	40.3	24	0.74
I-22	24" X 48" Precast Type C Modified Inlet w/ Bicycle Safe Grate	1257.20	1252.60	I-23	1252.50	I-22 TO I-21	HDPEP	81.4	18	6.02
I-23	24" X 48" Precast Type C Modified Inlet w/ Bicycle Safe Grate	1259.21			1254.30	I-23 TO I-22	HDPEP	42.4	18	4.01
I-24	24" X 48" Precast Type C Modified Inlet w/ Bicycle Safe Grate	1245.00	1240.40	I-24A	1240.30	I-24 TO I-19	HDPEP	31.0	18	3.16
I-24A	24" X 48" Precast Type C Modified Inlet w/ Bicycle Safe Grate	1245.00			1241.00	I-24A TO I-24	HDPEP	32.4	18	1.85
HW-4	HDPE ENDSECTION				1217.00	HW-4 TO I-17	HDPEP	41.1	18	6.33
OUT-7	HDPE ENDSECTION		1192.00							
I-8	24" X 48" Precast Type C Modified Inlet w/ Bicycle Safe Grate	1201.00	1194.95	I-9	1194.85	I-8 TO OUT-7	HDPEP	49.6	18	5.75
I-9	24" X 48" Precast Type C Modified Inlet w/ Bicycle Safe Grate	1201.00	1196.25	HW-3	1196.15	I-9 TO I-8	HDPEP	41.5	18	2.89
HW-3	HDPE ENDSECTION				1197.00	HW-3 TO I-9	HDPEP	20.1	18	3.73
OUT-3	HDPE ENDSECTION		1172.00							
I-6	24" X 48" Precast Type C Modified Inlet w/ Bicycle Safe Grate	1178.76	1173.90	I-7	1173.80	I-6 TO OUT-3	HDPEP	94.8	18	1.90
I-7	24" X 48" Precast Type C Modified Inlet w/ Bicycle Safe Grate	1178.76	1175.00	HW-2	1174.90	I-7 TO I-6	HDPEP	41.5	18	2.41
HW-2	HDPE ENDSECTION				1177.50	HW-2 TO I-7	HDPEP	19.5	18	12.82
EX OUT	HDPE ENDSECTION				1152.08					
I-1	24" X 48" Precast Type C Modified Inlet w/ Bicycle Safe Grate	1159.45	1152.13	I-2	1152.01	I-1 TO EX OUT	HDPEP	46.8	18	1.78
			1152.13	I-4						
I-2	24" X 48" Precast Type C Modified Inlet w/ Bicycle Safe Grate	1159.45	1154.17	I-3	1154.07	I-2 TO I-1	HDPEP	41.5	18	4.67
I-3	24" X 48" Precast Type C Modified Inlet w/ Bicycle Safe Grate	1158.75			1155.25	I-3 TO I-2	HDPEP	77.9	18	1.39
I-4	24" X 48" Precast Type C Modified Inlet w/ Bicycle Safe Grate	1163.12	1158.40	I-5	1158.30	I-4 TO I-1	HDPEP	365.9	18	1.69
I-5	24" X 48" Precast Type C Modified Inlet w/ Bicycle Safe Grate	1163.12			1159.25	I-5 TO I-4	HDPEP	41.5	18	2.05
OUT-2	END SECTION				1165.00					
OS-3	24" X 48" Precast Inlet w/ Low Profile Frame & Bicycle Safe Grate	1174.75			1170.00	OS-3 TO OUT-2	HDPEP	94.3	18	5.30
OUT-4	END SECTION				1172.00					
OS-2	24" X 48" Precast Inlet w/ Low Profile Frame & Bicycle Safe Grate	1182.00			1177.00	OS-2 TO OUT-4	HDPEP	53.6	18	9.30
OUT-5	END SECTION				1179.00					
OS-1A	24" X 48" Precast Inlet w/ Low Profile Frame & Bicycle Safe Grate	1183.00	1180.00	OS-1	1180.00	OS-2 TO OUT-5	HDPEP	15.2	24	6.60
OS-1	24" X 48" Precast Inlet w/ Low Profile Frame & Bicycle Safe Grate	1197.50			1190.00	OS-1 TO OS-1A	HDPEP	87.7	24	11.40
OUT-9	END SECTION				1192.00					
OS-4	24" X 48" Precast Inlet w/ Low Profile Frame & Bicycle Safe Grate	1212.50			1202.00	OS-4 TO OUT-9	HDPEP	168.5	24	5.92

PROPOSED STORM DRAIN STRUCTURE DATA

ID	STRUCTURE Type	TG ELEV	INVERT IN		INVERT OUT	PIPE RUN PIPE TYPE		LENGTH (FT)	SIZE (IN)	SLOPE (%)
OUT-6	CONCRETE HEADWALL				1192.00					
I-25	60" X 60" Precast Inlet Box w/ Type C Modified Inlet w/ Bicycle Safe Grate	1215.76	1208.60	I-26	1208.50	I-25 TO OUT-6	HDPEP	99.80	48	16.53
I-26	60" X 60" Precast Inlet Box w/ Type C Modified Inlet w/ Bicycle Safe Grate	1223.50	1216.50	I-27	1216.40	I-26 TO I-25	HDPEP	75.87	48	10.27
I-27	60" X 60" Precast Inlet Box w/ Type C Modified Inlet w/ Bicycle Safe Grate	1229.25	1218.40	I-28	1218.30	I-27 TO I-26	HDPEP	71.74	48	2.51
I-28	60" X 60" Precast Inlet Box w/ Type C Modified Inlet w/ Bicycle Safe Grate	1230.10	1219.41	I-29	1219.31	I-28 TO I-27	HDPEP	94.27	48	0.87
			1224.80	I-46						
I-29	60" X 60" Precast Inlet Box w/ Type C Modified Inlet w/ Bicycle Safe Grate	1230.10	1220.26	I-29A	1220.16	I-29 TO I-28	HDPEP	148.98	48	0.50
			1225.55	I-51						
I-29A	60" X 60" Precast Inlet Box w/ Type C Modified Inlet w/ Bicycle Safe Grate	1230.19	1220.89	I-30	1220.79	I-29A TO I-29	HDPEP	105.78	48	0.50
I-30	60" X 60" Precast Inlet Box w/ Type C Modified Inlet w/ Bicycle Safe Grate	1230.00	1221.41	I-30A	1221.31	I-30 TO I-29A	HDPEP	58.91	48	0.71
			1225.20	I-53						
I-30A	60" X 60" Precast Inlet Box w/ Type C Modified Inlet w/ Bicycle Safe Grate	1229.65	1222.91	I-31	1221.91	I-30A TO I-30	HDPEP	86.10	48	0.58
I-31	42" X 48" Precast Inlet Box w/ Type C Modified Inlet w/ Bicycle Safe Grate	1229.30	1223.80	I-32	1223.30	I-31 TO I-30A	HDPEP	66.90	36	0.58
			1223.40	HW-						
I-32	24" X 48" Precast Type C Modified Inlet w/ Bicycle Safe Grate	1234.90	1227.90	I-33	1227.80	I-32 TO I-31	HDPEP	71.67	30	5.58
I-33	24" X 48" Precast Type C Modified Inlet w/ Bicycle Safe Grate	1239.70	1231.90	I-34	1231.80	I-33 TO I-32	HDPEP	72.50	30	5.38
I-34	24" X 48" Precast Type C Modified Inlet w/ Bicycle Safe Grate	1241.25	1234.05	I-35	1233.95	I-34 TO I-33	HDPEP	72.50	30	2.83
I-35	24" X 48" Precast Type C Modified Inlet w/ Bicycle Safe Grate	1243.20	1235.14	I-36	1235.04	I-35 TO I-34	HDPEP	132.50	30	0.75
I-36	24" X 48" Precast Type C Modified Inlet w/ Bicycle Safe Grate	1244.40	1236.01	I-37	1235.91	I-36 TO I-35	HDPEP	72.50	30	1.06
I-37	24" X 48" Precast Type C Modified Inlet w/ Bicycle Safe Grate	1245.90	1236.87	I-38	1236.77	I-37 TO I-36	HDPEP	72.50	30	1.05
			1241.65	I-61						
I-38	42" X 48" Precast Inlet Box w/ Type C Modified Inlet w/ Bicycle Safe Grate	1247.04	1238.25	I-39	1238.15	I-38 TO I-37	HDPEP	176.41	30	0.73
			1241.90	I-41						
I-39	42" X 48" Precast Inlet Box w/ Type C Modified Inlet w/ Bicycle Safe Grate	1243.93	1238.73	I-40	1238.63	I-39 TO I-38	HDPEP	74.80	30	0.51
I-40	42" X 48" Precast Inlet Box w/ Type C Modified Inlet w/ Bicycle Safe Grate	1243.93			1239.15	I-40 TO I-39	HDPEP	31.33	30	1.34
I-41	24" X 48" Precast Type C Modified Inlet w/ Bicycle Safe Grate	1253.25	1244.53	I-42	1244.43	I-41 TO I-38	HDPEP	154.52	24	1.64
I-42	24" X 48" Precast Type C Modified Inlet w/ Bicycle Safe Grate	1253.25	1249.75	I-43	1244.70	I-42 TO I-41	HDPEP	33.50	24	0.51
			1244.80	I-45						
I-43	24" X 48" Precast Type C Modified Inlet w/ Bicycle Safe Grate	1257.25	1253.75	I-44	1253.65	I-43 TO I-42	HDPEP	94.10	18	4.14
I-44	24" X 48" Precast Type C Modified Inlet w/ Bicycle Safe Grate	1259.20			1255.70	I-44 TO I-43	HDPEP	41.30	18	4.72
I-45	24" X 48" Precast Type C Modified Inlet w/ Bicycle Safe Grate	1250.43			46.50	I-45 TO I-42	HDPEP	40.08	24	4.24
I-46	24" X 48" Precast Type C Modified Inlet w/ Bicycle Safe Grate	1235.70	1231.40	I-47	1228.80	I-46 TO I-28	HDPEP	70.28	24	5.69
I-47	24" X 48" Precast Type C Modified Inlet w/ Bicycle Safe Grate	1240.50	1233.80	I-48	1233.70	I-47 TO I-46	HDPEP	72.80	24	3.16
I-48	24" X 48" Precast Type C Modified Inlet w/ Bicycle Safe Grate	1242.60	1235.10	I-49	1234.60	I-48 TO I-47	HDPEP	81.20	24	0.99
I-48A	24" X 48" Precast Type M Modified Inlet w/ Bicycle Safe Grate	1244.22			1236.00	I-48A TO I-48	HDPEP	70.92	15	0.78
I-49	24" X 48" Precast Type C Modified Inlet w/ Bicycle Safe Grate	1242.16	1236.50	I-50	1236.15	I-49 TO I-48	HDPEP	190.60	18	0.55
I-50	24" X 48" Precast Type C Modified Inlet w/ Bicycle Safe Grate	1240.56			1236.95	I-50 TO I-49	HDPEP	90.67	15	0.50
I-51	24" X 48" Precast Type C Modified Inlet w/ Bicycle Safe Grate	1235.70	1232.15	I-52	1229.55	I-51 TO I-29	HDPEP	70.29	15	5.69
I-52	24" X 48" Precast Type C Modified Inlet w/ Bicycle Safe Grate	1240.50			1234.45	I-52 TO I-51	HDPEP	72.75	15	3.16
I-53	24" X 48" Precast Type C Modified Inlet w/ Bicycle Safe Grate	1235.67	1231.80	I-54	1229.20	I-53 TO I-30	HDPEP	70.29	18	5.69
I-54	24" X 48" Precast Type C Modified Inlet w/ Bicycle Safe Grate	1240.35	1236.55	I-55	1233.95	I-54 TO I-53	HDPEP	72.80	18	2.95
I-55	24" X 48" Precast Type C Modified Inlet w/ Bicycle Safe Grate	1242.00	1238.30	I-56	1238.20	I-55 TO I-54	HDPEP	73.30	18	2.25
I-56	24" X 48" Precast Type C Modified Inlet w/ Bicycle Safe Grate	1244.20	1240.85	I-57	1240.60	I-56 TO I-55	HDPEP	161.60	18	1.42
			1240.85	I-59						
I-57	24" X 48" Precast Type C Modified Inlet w/ Bicycle Safe Grate	1245.10	1241.76	I-58	1241.66	I-57 TO I-56	HDPEP	44.10	15	1.84
I-58	24" X 48" Precast Type C Modified Inlet w/ Bicycle Safe Grate	1246.87			1242.75	I-58 TO I-57	HDPEP	72.50	15	1.37
I-59	24" X 48" Precast Type C Modified Inlet w/ Bicycle Safe Grate	1245.70	1242.00	I-59A	1241.90	I-59 TO I-56	HDPEP	95.46	15	1.10
I-59A	24" X 48" Precast Type M Modified Inlet w/ Bicycle Safe Grate	1247.83	1243.25	I-60	1243.15	I-59A TO I-59	HDPEP	151.22	15	0.76
I-60	24" X 48" Precast Type C Modified Inlet w/ Bicycle Safe Grate	1249.75			1246.00	I-60 TO I-59A	HDPEP	67.18	15	4.09
I-61	24" X 48" Precast Type C Modified Inlet w/ Bicycle Safe Grate	1248.50			1243.25	I-61 TO I-37	HDPEP	88.40	15	1.81
HW	PIPE STUB				1223.80	HW TO I-31	HDPEP	77.00	24	0.52

PROPOSED STORM DRAIN STRUCTURE DATA

ID	STRUCTURE Type	TG ELEV	INVERT IN		INVERT OUT	PIPE RUN PIPE TYPE		LENGTH (FT)	SIZE (IN)	SLOPE (%)
OUT-1	CONCRETE HEADWALL				1158.80					
HW-1	CONCRETE HEADWALL				1160.35	HW-1 TO OUT-1	HDPEP	96.0	2 - 60	1.62

PennTerra ENGINEERING INC.

CENTRAL PENNSYLVANIA REGION OFFICE:
3075 ENTERPRISE DRIVE
SUITE 100
STATE COLLEGE, PA 16801
PH: 814-231-8285
Fax: 814-237-2308

LANCASTER REGION OFFICE:
3904 B ABEL DRIVE
COLUMBIA, PA 17512
PH: 717-522-5031
Fax: 717-522-5046

WWW.PENNTERRA.COM

COPYRIGHT 2021 BY THE ENGINEER
THE INFORMATION CONTAINED HEREON MAY NOT BE USED OR COPIED IN ANY MANNER WITHOUT THE WRITTEN PERMISSION OF THE ENGINEER EXCEPT AS OTHERWISE PROVIDED BY APPROPRIATE LAWS OR STATUTES.
© PENNTERRA ENGINEERING 2021
ALL RIGHTS RESERVED

COMMONWEALTH OF PENNSYLVANIA
REGISTERED PROFESSIONAL
C. ANTHONY FRUCHTL
ENGINEER
PE-062413

Designer EAH
Draftsman EAH
Proj.Manager CAF
Surveyor BRK
Perimeter Ck.
Book 463 Pg 1
File 19286.01-PCSMP-SWM-DETAILS-4
Layout SWM-DETAILS-4

Date	Description

REVISIONS

TOFTREES PLANNED COMMUNITY WEST MOUNT NITTANY HEALTH OUTPATIENT CENTER

PATTON TOWNSHIP
CENTRE COUNTY
PENNSYLVANIA

FINAL LAND DEVELOPMENT PLAN

POST CONSTRUCTION STORMWATER MANAGEMENT DETAILS

PROJECT NO. 19286.01
DATE NOVEMBER 5, 2021
SCALE N.T.S.
SHEET NO. PC9

P:\ddtproj\2019\19286\19286.01 - Phase 1\Design\plot files\final plans\19286.01-PCSMP-SWM-DETAILS-4.dwg, 11/5/2021 11:23:41 AM, 1:1

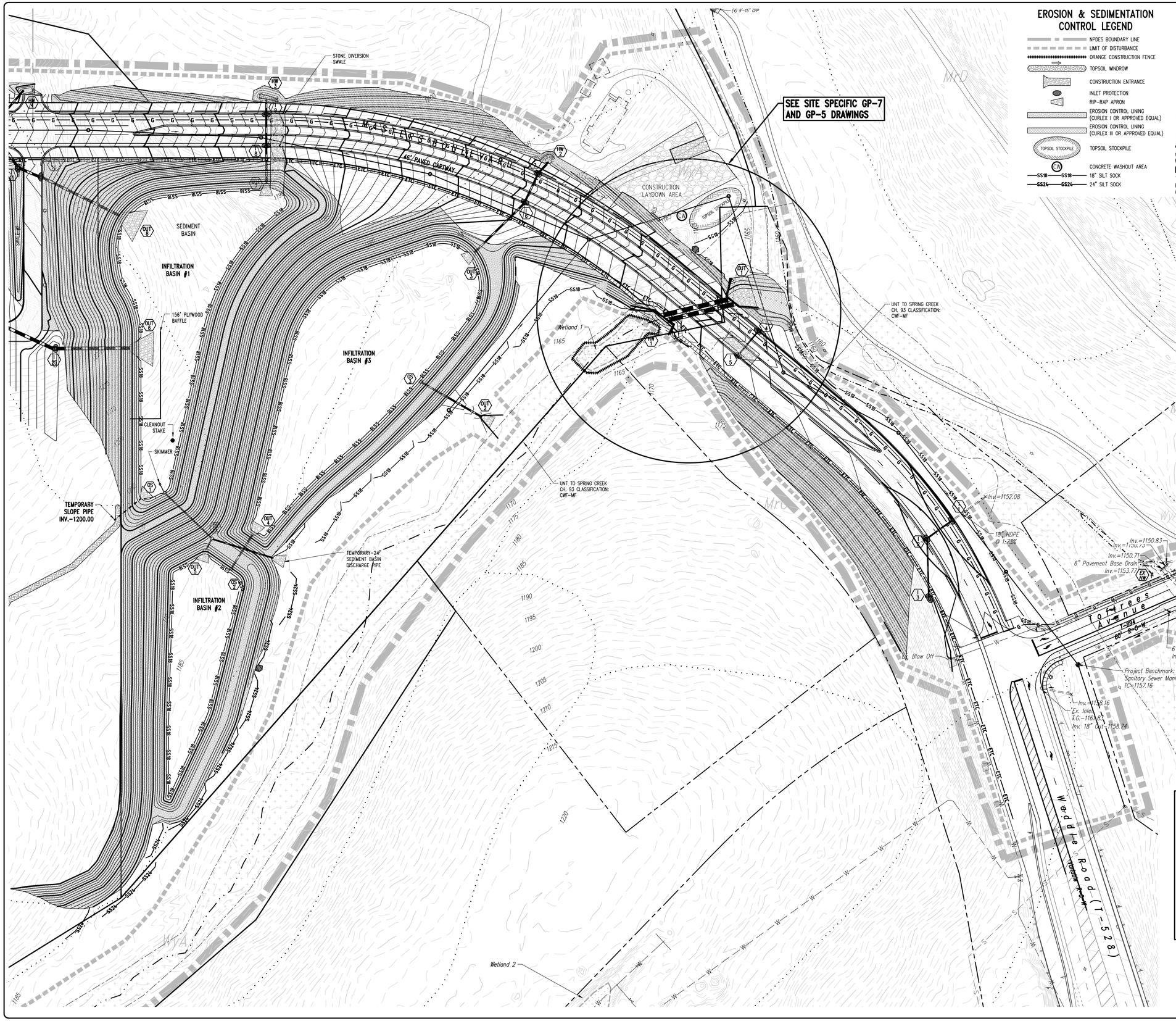

EROSION & SEDIMENTATION CONTROL LEGEND

- NPDES BOUNDARY LINE
- LIMIT OF DISTURBANCE
- ORANGE CONSTRUCTION FENCE
- TOPSOIL WINDROW
- CONSTRUCTION ENTRANCE
- INLET PROTECTION
- RIP-RAP APRON
- EROSION CONTROL LINING (CURLEX I OR APPROVED EQUAL)
- EROSION CONTROL LINING (CURLEX III OR APPROVED EQUAL)
- TOPSOIL STOCKPILE
- CONCRETE WASHOUT AREA
- SS18 SS18 18" SILT SOCK
- SS24 SS24 24" SILT SOCK

CRITICAL STAGES OF CONSTRUCTION NOTES:

THE FOLLOWING STAGES OF CONSTRUCTION REQUIRE THAT A LICENSED PROFESSIONAL OR DESIGNEE REGISTERED WITHIN THE STATE OF PENNSYLVANIA BE PRESENT ONSITE. NOTICE SHALL BE GIVEN TWO WEEKS PRIOR TO COMMENCING CONSTRUCTION ACTIVITIES FOR WHICH THE LICENSED PROFESSIONAL BE PRESENT. THE GENERAL SITE CONTRACTOR SHALL BE RESPONSIBLE FOR SUPPLYING & COORDINATING THE LICENSED PROFESSIONAL. THE LICENSED PROFESSIONAL WILL BE REQUIRED TO CERTIFY AND SEAL AS-BUILT DRAWINGS AT THE END OF CONSTRUCTION THAT THE STORMWATER FACILITIES HAVE BEEN BUILT TO THE SPECIFICATIONS ON THE POST CONSTRUCTION STORMWATER MANAGEMENT PLANS AND DETAILS. THE CONTRACTOR SHALL THEN FILE THIS CERTIFICATION WITH THE CENTRE COUNTY CONSERVATION DISTRICT WHEN THE NOTICE OF TERMINATION (NOT) DOCUMENT IS COMPLETED.

1. CONSTRUCTION, EXCAVATION OF BASIN BOTTOM (INFILTRATION TESTING REQUIRED), AND PLACEMENT OF BACKFILL FOR BASIN BERMS (COMPACTION TESTING REQUIRED) ON THE FOLLOWING STORMWATER FACILITIES: INFILTRATION BASIN 1,2,3&4
2. AMENDED TOPSOIL PLACEMENT IN ALL INFILTRATION BASINS, SOIL SCIENTIST MUST VERIFY MIXTURE.

NOTE:

UPON CONTRACTOR BEING AWARDED THE SITE WORK CONTRACT, THE CONTRACTOR IS RESPONSIBLE AND SHALL PROCESS FORMS W/ THE CENTRE COUNTY CONSERVATION DISTRICT TO BECOME A CO-PERMITTEE ON THE NPDES PERMIT AND SHALL REMAIN AS A CO-PERMITTEE UNTIL THE CONTRACTOR FILES THE NOTICE OF TERMINATION. THE NOTICE OF TERMINATION REQUIRES CERTIFICATION OF THE STORMWATER FACILITIES MENTIONED ON THE POST CONSTRUCTION STORMWATER PLAN.

AVOIDANCE MEASURE

CONDUCT ANY TREE CUTTING, TREE INUNDATION (FLOODING), AND PRESCRIBED BURNING BETWEEN NOVEMBER 15 AND MARCH 31.

NATURALLY OCCURING GEOLOGIC FORMATIONS/SOIL CONDITIONS

THERE ARE NO KNOWN NATURALLY OCCURING GEOLOGIC FORMATIONS OR SOIL CONDITIONS. IF A SINKHOLE IS ENCOUNTERED DUE TO KARST TOPOGRAPHY, THE SINKHOLE SHALL BE REPAIRED AS SPECIFIED ON THE SINKHOLE REPAIR DETAIL AND/OR A GEOTECHNICAL ENGINEER WILL BE CONTACTED FOR PROPER REPAIR PROCEDURES.

SURVEY FEATURES LEGEND

- Property Line, Lot Line or Right of Way Line
- Adjoining Property Line

SOILS LEGEND

Soil cover on the site consists of:

- LvB – Leetonia sand, variant 3%-8% Slopes
- MrB – Morrison sandy loam, 2%-8% Slopes
- MrC – Morrison sandy loam, 8%-15% Slopes
- MrD – Morrison sandy loam, 15%-25% Slopes
- MTF – Morrison very stony loam, steep
- WyA – Wyoming gravelly sand loam, rarely flooded, 0 to 5 percent slopes

EXISTING FEATURES LEGEND

- EXISTING BUILDING – Existing Building
- Existing Curbing & Edge of Pavement
- Existing Concrete Areas
- 1109 – Existing Contours w/ Elevation (1's & 2's)
- 1110 – Existing Contours w/ Elevation (5's & 10's)
- S – Existing Sanitary Sewer w/ Manhole
- CO – Existing Sanitary Sewer Lateral w/ Clean Out
- WV – Existing Water Line w/ Valve
- W – Existing Water Service Lateral
- Existing Storm Sewer Line w/ Inlet
- G – Existing Gas Line
- E – Existing Underground Electric
- T – Existing Underground Telephone
- TV – Existing Underground TV Cable
- Existing Overhead Utility Line w/ Pole
- Existing Fire Hydrant
- Existing Soil Limit Line / Boundary
- HaB – Existing Soil Type
- Existing Tree Row
- Existing Stream
- Existing Floodplain
- Delineated Wetlands Line

PROPOSED FEATURES LEGEND

- PROPOSED CURBING & EDGE OF PAVEMENT
- PROPOSED CONCRETE SIDEWALK
- PROPOSED MINOR CONTOURS W/ ELEVATION (1's & 2's)
- PROPOSED MAJOR CONTOURS W/ ELEVATION (5's & 10's)
- PROPOSED 8" SANITARY SEWER W/ MANHOLE
- PROPOSED 6" PVC SANITARY SEWER LATERAL W/ CLEAN OUT
- PROPOSED 8" WATER LINE W/ VALVE
- CB – PROPOSED WATER SERVICE LATERAL W/ CURB BOX
- PROPOSED STORM SEWER W/ TYPE C INLET
- G G – PROPOSED GAS LINE
- ETC ETC – PROPOSED COMBINED UTILITY CONDUIT
- PROPOSED STORM SEWER INLET – TYPE M
- PROPOSED STORM SEWER INLET – TYPE C
- PROPOSED TREE ROW

PennTerra ENGINEERING INC.

CENTRAL PENNSYLVANIA REGION OFFICE:
3075 ENTERPRISE DRIVE
SUITE 100
STATE COLLEGE, PA 16801
PH: 814-231-8285
Fax: 814-237-2308

LANCASTER REGION OFFICE:
3904 B ABEL DRIVE
COLUMBIA, PA 17512
PH: 717-522-5031
Fax: 717-522-5046

WWW.PENNTERRA.COM

COPYRIGHT 2021 BY THE ENGINEER
THE INFORMATION CONTAINED HEREON MAY NOT BE USED OR COPIED IN ANY MANNER WITHOUT THE WRITTEN PERMISSION OF THE ENGINEER EXCEPT AS OTHERWISE PROVIDED BY APPROPRIATE LAWS OR STATUTES.
© PENNTERRA ENGINEERING 2021 ALL RIGHTS RESERVED

COMMONWEALTH OF PENNSYLVANIA – REGISTERED PROFESSIONAL – C. ANTHONY FRUCHTL – ENGINEER – PE-062413

Designer	EAH
Draftsman	EAH
Proj.Manager	CAF
Surveyor	BRK
Perimeter Ck.	
Book	463 Pg 1
File	19286.01-PCSMP-ES-PANELS-INTERM
Layout	ES-INTERM-PANEL 1

Date	Description

REVISIONS

TOFTREES PLANNED COMMUNITY WEST MOUNT NITTANY HEALTH OUTPATIENT CENTER

PATTON TOWNSHIP
CENTRE COUNTY
PENNSYLVANIA

FINAL LAND DEVELOPMENT PLAN

EROSION AND SEDIMENTATION CONTROL PLAN - STAGE A - PANEL 1

PROJECT NO.	19286.01
DATE	NOVEMBER 5, 2021
SCALE	1"=60'
SHEET NO.	ES1

P:\Addproj\2019\19286\19286.01 - Phase 1\Design\plot files\final plans\19286.01-PCSMP-ES-PANELS-INTERM.dwg, 11/5/2021 11:24:57 AM, 11

CRITICAL STAGES OF CONSTRUCTION NOTES:

THE FOLLOWING STAGES OF CONSTRUCTION REQUIRE THAT A LICENSED PROFESSIONAL OR DESIGNEE REGISTERED WITHIN THE STATE OF PENNSYLVANIA BE PRESENT ONSITE. NOTICE SHALL BE GIVEN TWO WEEKS PRIOR TO COMMENCING CONSTRUCTION ACTIVITIES FOR WHICH THE LICENSED PROFESSIONAL BE PRESENT. THE GENERAL SITE CONTRACTOR SHALL BE RESPONSIBLE FOR SUPPLYING & COORDINATING THE LICENSED PROFESSIONAL. THE LICENSED PROFESSIONAL WILL BE REQUIRED TO CERTIFY AND SEAL AS-BUILT DRAWINGS AT THE END OF CONSTRUCTION THAT THE STORMWATER FACILITIES HAVE BEEN BUILT TO THE SPECIFICATIONS ON THE POST CONSTRUCTION STORMWATER MANAGEMENT PLANS AND DETAILS. THE CONTRACTOR SHALL THEN FILE THIS CERTIFICATION WITH THE CENTRE COUNTY CONSERVATION DISTRICT WHEN THE NOTICE OF TERMINATION (NOT) DOCUMENT IS COMPLETED.

1. CONSTRUCTION, EXCAVATION OF BASIN BOTTOM (INFILTRATION TESTING REQUIRED), AND PLACEMENT OF BACKFILL FOR BASIN BERMS (COMPACTION TESTING REQUIRED) ON THE FOLLOWING STORMWATER FACILITIES:
   INFILTRATION BASIN 1,2,3&4
2. AMENDED TOPSOIL PLACEMENT IN ALL INFILTRATION BASINS, SOIL SCIENTIST MUST VERIFY MIXTURE.

NOTE:

UPON CONTRACTOR BEING AWARDED THE SITE WORK CONTRACT, THE CONTRACTOR IS RESPONSIBLE AND SHALL PROCESS FORMS W/ THE CENTRE COUNTY CONSERVATION DISTRICT TO BECOME A CO-PERMITTEE ON THE NPDES PERMIT AND SHALL REMAIN AS A CO-PERMITTEE UNTIL THE CONTRACTOR FILES THE NOTICE OF TERMINATION. THE NOTICE OF TERMINATION REQUIRES CERTIFICATION OF THE STORMWATER FACILITIES MENTIONED ON THE POST CONSTRUCTION STORMWATER PLAN.

AVOIDANCE MEASURE

CONDUCT ANY TREE CUTTING, TREE INUNDATION (FLOODING), AND PRESCRIBED BURNING BETWEEN NOVEMBER 15 AND MARCH 31.

NATURALLY OCCURING GEOLOGIC FORMATIONS/SOIL CONDITIONS

THERE ARE NO KNOWN NATURALLY OCCURING GEOLOGIC FORMATIONS OR SOIL CONDITIONS. IF A SINKHOLE IS ENCOUNTERED DUE TO KARST TOPOGRAPHY, THE SINKHOLE SHALL BE REPAIRED AS SPECIFIED ON THE SINKHOLE REPAIR DETAIL AND/OR A GEOTECHNICAL ENGINEER WILL BE CONTACTED FOR PROPER REPAIR PROCEDURES.

EROSION & SEDIMENTATION CONTROL LEGEND

- NPDES BOUNDARY LINE
- LIMIT OF DISTURBANCE
- ORANGE CONSTRUCTION FENCE
- TOPSOIL WINDROW
- CONSTRUCTION ENTRANCE
- INLET PROTECTION
- RIP-RAP APRON
- EROSION CONTROL LINING (CURLEX I OR APPROVED EQUAL)
- EROSION CONTROL LINING (CURLEX III OR APPROVED EQUAL)
- TOPSOIL STOCKPILE
- CW — CONCRETE WASHOUT AREA
- SS18 — SS18 — 18" SILT SOCK
- SS24 — SS24 — 24" SILT SOCK

SURVEY FEATURES LEGEND

- Property Line, Lot Line or Right of Way Line
- Adjoining Property Line

SOILS LEGEND

Soil cover on the site consists of:

- LwB – Leetonia sand, variant 3%-8% Slopes
- MrB – Morrison sandy loam, 2%-8% Slopes
- MrC – Morrison sandy loam, 8%-15% Slopes
- MrD – Morrison sandy loam, 15%-25% Slopes
- MTF – Morrison very stony loam, steep
- WyA – Wyoming gravelly sand loam, rarely flooded, 0 to 5 percent slopes

EXISTING FEATURES LEGEND

- EXISTING BUILDING — Existing Building
- Existing Curbing & Edge of Pavement
- Existing Concrete Areas
- 1109 — Existing Contours w/ Elevation (1's & 2's)
- 1110 — Existing Contours w/ Elevation (5's & 10's)
- S — Existing Sanitary Sewer w/ Manhole
- CO — S — Existing Sanitary Sewer Lateral w/ Clean Out
- W — W — Existing Water Line w/ Valve
- W — Existing Water Service Lateral
- Existing Storm Sewer Line w/ Inlet
- G — Existing Gas Line
- E — Existing Underground Electric
- T — Existing Underground Telephone
- TV — Existing Underground TV Cable
- Existing Overhead Utility Line w/ Pole
- Existing Fire Hydrant
- Existing Soil Limit Line / Boundary
- HaB — Existing Soil Type
- Existing Tree Row

PROPOSED FEATURES LEGEND

- PROPOSED BUILDING — PROPOSED BUILDING
- PROPOSED CURBING & EDGE OF PAVEMENT
- PROPOSED CONCRETE SIDEWALK
- PROPOSED CONCRETE AREAS
- PROPOSED BITUMINOUS PAVEMENT AREAS
- PROPOSED MINOR CONTOURS W/ ELEVATION (1's & 2's)
- PROPOSED MAJOR CONTOURS W/ ELEVATION (5's & 10's)
- PROPOSED 8" SANITARY SEWER W/ MANHOLE
- PROPOSED 6" PVC SANITARY SEWER LATERAL W/ CLEAN OUT
- PROPOSED 8" WATER LINE W/ VALVE
- CB — W — PROPOSED WATER SERVICE LATERAL W/ CURB BOX
- PROPOSED STORM SEWER W/ TYPE C INLET
- G — G — PROPOSED GAS LINE
- ETC — ETC — PROPOSED COMBINED UTILITY CONDUIT
- PROPOSED STORM SEWER INLET - TYPE M
- PROPOSED STORM SEWER INLET - TYPE C
- PROPOSED TREE ROW
- PROPOSED PAINTED HANDICAPPED PARKING SYMBOLS
- 13 — PROPOSED PARKING STALL COUNT
- DEPRESSED CURB TRANSITION CURB — PROPOSED DEPRESSED CURB W/ CURB TRANSITION

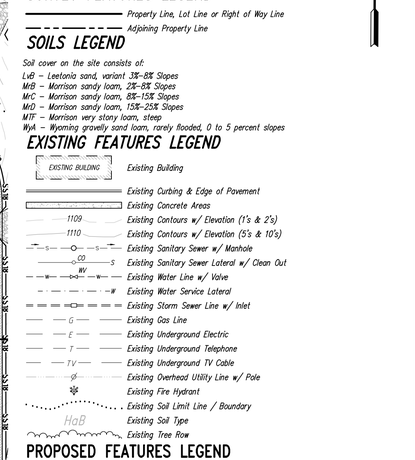

PANEL KEY MAP
SCALE: 1"=1000'

GRAPHIC SCALE

60 0 30 60 120 240

(IN FEET)
1 inch = 60 ft.

PennTerra ENGINEERING INC.

CENTRAL PENNSYLVANIA REGION OFFICE:
3075 ENTERPRISE DRIVE
SUITE 100
STATE COLLEGE, PA 16801
PH: 814-231-8285
Fax: 814-237-2308

LANCASTER REGION OFFICE:
3904 B ABEL DRIVE
COLUMBIA, PA 17512
PH: 717-522-5031
Fax: 717-522-5046

WWW.PENNTERRA.COM

COPYRIGHT 2021 BY THE ENGINEER
THE INFORMATION CONTAINED HEREON MAY NOT BE USED OR COPIED IN ANY MANNER WITHOUT THE WRITTEN PERMISSION OF THE ENGINEER EXCEPT AS OTHERWISE PROVIDED BY APPROPRIATE LAWS OR STATUTES.
© PENNTERRA ENGINEERING 2021
ALL RIGHTS RESERVED

COMMONWEALTH OF PENNSYLVANIA — REGISTERED PROFESSIONAL — C. ANTHONY FRUCHTL — ENGINEER — PE-062413

Designer	EAH
Draftsman	EAH
Proj.Manager	CAF
Surveyor	BRK
Perimeter Ck.	
Book	463 Pg 1
File	19286.01-PCSMP-ES-PANELS-INTERM
Layout	ES-INTERM-PANEL 2

Date	Description

REVISIONS

TOFTREES PLANNED COMMUNITY WEST MOUNT NITTANY HEALTH OUTPATIENT CENTER

PATTON TOWNSHIP
CENTRE COUNTY
PENNSYLVANIA

FINAL LAND DEVELOPMENT PLAN

EROSION AND SEDIMENTATION CONTROL PLAN - STAGE A - PANEL 2

PROJECT NO.
19286.01

DATE
NOVEMBER 5, 2021

SCALE
1"=60'

SHEET NO.
ES2

P:\dotproj\2019\19286\19286.01 - Phase 1\Design\dot files\final plans\19286.01-PCSMP-ES-PANELS-INTERM.dwg, 11/5/2021 11:26:28 AM, 1:1

STONE DIVERSION SWALE

SEDIMENT BASIN

INFILTRATION BASIN #1

INFILTRATION BASIN #3

INFILTRATION BASIN #2

156" PLYWOOD BAFFLE

CLEANOUT STAKE

SKIMMER

TEMP. 24" SEDIMENT BASIN DISCHARGE PIPE

TOP OF SLOPE BERM

46' PAVED CARTWAY

CONSTRUCTION LAYDOWN AREA

TOPSOIL STOCKPILE

(4) 9"-15" CPP

UNT TO SPRING CREEK CH. 93 CLASSIFICATION: CWF-MF

Wetland 1

Wetland 2

Inv.=1152.08

180' HDPE @ 1.28%

CLEAN WATER PUMP BYPASS DETAIL

Inv.=1150.83

Inv.=1150.73

Inv.=1150.71

6" Pavement Base Drain Inv.=1153.77

(2) 5

@ 1.0

6" Pavement Bas

Inv.=1154.08

Inv.=1

Ex. Blow Off

Project Benchmark: Sanitary Sewer Manhole 100-27 TC=1157.16

Inv.=1158.16

Ex. Inlet K.G.=1161.82 Inv. 18" Out=1158.74

Toftrees Avenue T-391 60' R.O.W.

Waddle Road (T-528) 70' R.O.W.

MrD MrC WyA

SURVEY FEATURES LEGEND

- Property Line, Lot Line or Right of Way Line
- Adjoining Property Line

SOILS LEGEND

Soil cover on the site consists of:

- LvB – Leetonia sand, variant 3%-8% Slopes
- MrB – Morrison sandy loam, 2%-8% Slopes
- MrC – Morrison sandy loam, 8%-15% Slopes
- MrD – Morrison sandy loam, 15%-25% Slopes
- MTF – Morrison very stony loam, steep
- WyA – Wyoming gravelly sand loam, rarely flooded, 0 to 5 percent slopes

EXISTING FEATURES LEGEND

- Existing Building
- Existing Curbing & Edge of Pavement
- Existing Concrete Areas
- 1109 Existing Contours w/ Elevation (1's & 2's)
- 1110 Existing Contours w/ Elevation (5's & 10's)
- Existing Sanitary Sewer w/ Manhole
- Existing Sanitary Sewer Lateral w/ Clean Out
- Existing Water Line w/ Valve
- Existing Water Service Lateral
- Existing Storm Sewer Line w/ Inlet
- Existing Gas Line
- Existing Underground Electric
- Existing Underground Telephone
- Existing Underground TV Cable
- Existing Overhead Utility Line w/ Pole
- Existing Fire Hydrant
- Existing Soil Limit Line / Boundary
- HoB Existing Soil Type
- Existing Tree Row
- Existing Stream
- Existing Floodplain
- Delineated Wetlands Line

PROPOSED FEATURES LEGEND

- PROPOSED BUILDING
- PROPOSED CURBING & EDGE OF PAVEMENT
- PROPOSED CONCRETE SIDEWALK
- PROPOSED CONCRETE AREAS
- PROPOSED BITUMINOUS PAVEMENT AREAS
- 1109 PROPOSED MINOR CONTOURS W/ ELEVATION (1's & 2's)
- 1110 PROPOSED MAJOR CONTOURS W/ ELEVATION (5's & 10's)
- PROPOSED 8" SANITARY SEWER W/ MANHOLE
- PROPOSED 6" PVC SANITARY SEWER LATERAL W/ CLEAN OUT
- PROPOSED 8" WATER LINE W/ VALVE
- PROPOSED WATER SERVICE LATERAL W/ CURB BOX
- PROPOSED STORM SEWER W/ TYPE C INLET
- G PROPOSED GAS LINE
- ETC PROPOSED COMBINED UTILITY CONDUIT
- PROPOSED STORM SEWER INLET – TYPE M
- PROPOSED STORM SEWER INLET – TYPE C
- PROPOSED TREE ROW
- PROPOSED PAINTED HANDICAPPED PARKING SYMBOLS
- PROPOSED PARKING STALL COUNT
- PROPOSED DEPRESSED CURB W/ CURB TRANSITION

EROSION & SEDIMENTATION CONTROL LEGEND

- NPDES BOUNDARY LINE
- LIMIT OF DISTURBANCE
- ORANGE CONSTRUCTION FENCE
- TOPSOIL WINDROW
- CONSTRUCTION ENTRANCE
- INLET PROTECTION
- RIP-RAP APRON
- EROSION CONTROL LINING (CURLEX I OR APPROVED EQUAL)
- EROSION CONTROL LINING (CURLEX III OR APPROVED EQUAL)
- TOPSOIL STOCKPILE
- CW CONCRETE WASHOUT AREA
- SS18 SS18 18" SILT SOCK
- SS24 SS24 24" SILT SOCK

PANEL 1

0 500 1000

GRAPHIC SCALE 1 inch = 1000' ft.

PANEL KEY MAP
SCALE: 1"=1000'

GRAPHIC SCALE

60 0 30 60 120 240

(IN FEET)
1 inch = 60 ft.

PennTerra ENGINEERING INC.

CENTRAL PENNSYLVANIA REGION OFFICE:
3075 ENTERPRISE DRIVE
SUITE 100
STATE COLLEGE, PA 16801
PH: 814-231-8285
Fax: 814-237-2308

LANCASTER REGION OFFICE:
3904 B ABEL DRIVE
COLUMBIA, PA 17512
PH: 717-522-5031
Fax: 717-522-5046

WWW.PENNTERRA.COM

COPYRIGHT 2021 BY THE ENGINEER
THE INFORMATION CONTAINED HEREON MAY NOT BE USED OR COPIED IN ANY MANNER WITHOUT THE WRITTEN PERMISSION OF THE ENGINEER EXCEPT AS OTHERWISE PROVIDED BY APPROPRIATE LAWS OR STATUTES.
© PENNTERRA ENGINEERING 2021 ALL RIGHTS RESERVED

COMMONWEALTH OF PENNSYLVANIA — REGISTERED PROFESSIONAL — C. ANTHONY FRUCHTL — ENGINEER PE-062413

Designer	EAH
Draftsman	EAH
Proj.Manager	CAF
Surveyor	BRK
Perimeter Ck.	
Book	463 Pg 1
File	19286.01-PCSMP-ES-PANEL-1
Layout	ES-PANEL_1

Date	Description

REVISIONS

TOFTREES PLANNED COMMUNITY WEST MOUNT NITTANY HEALTH OUTPATIENT CENTER

PATTON TOWNSHIP
CENTRE COUNTY
PENNSYLVANIA

FINAL LAND DEVELOPMENT PLAN

EROSION AND SEDIMENTATION CONTROL PLAN – STAGE B – PANEL 1

PROJECT NO. 19286.01

DATE NOVEMBER 5, 2021

SCALE 1"=60'

SHEET NO. ES3

P:\dotproj\2019\19286\19286.01 - Phase 1\Design\pkt files\final plans\19286.01-PCSMP-ES-PANEL-1.dwg, 11/5/2021 11:28:04 AM, 1:1

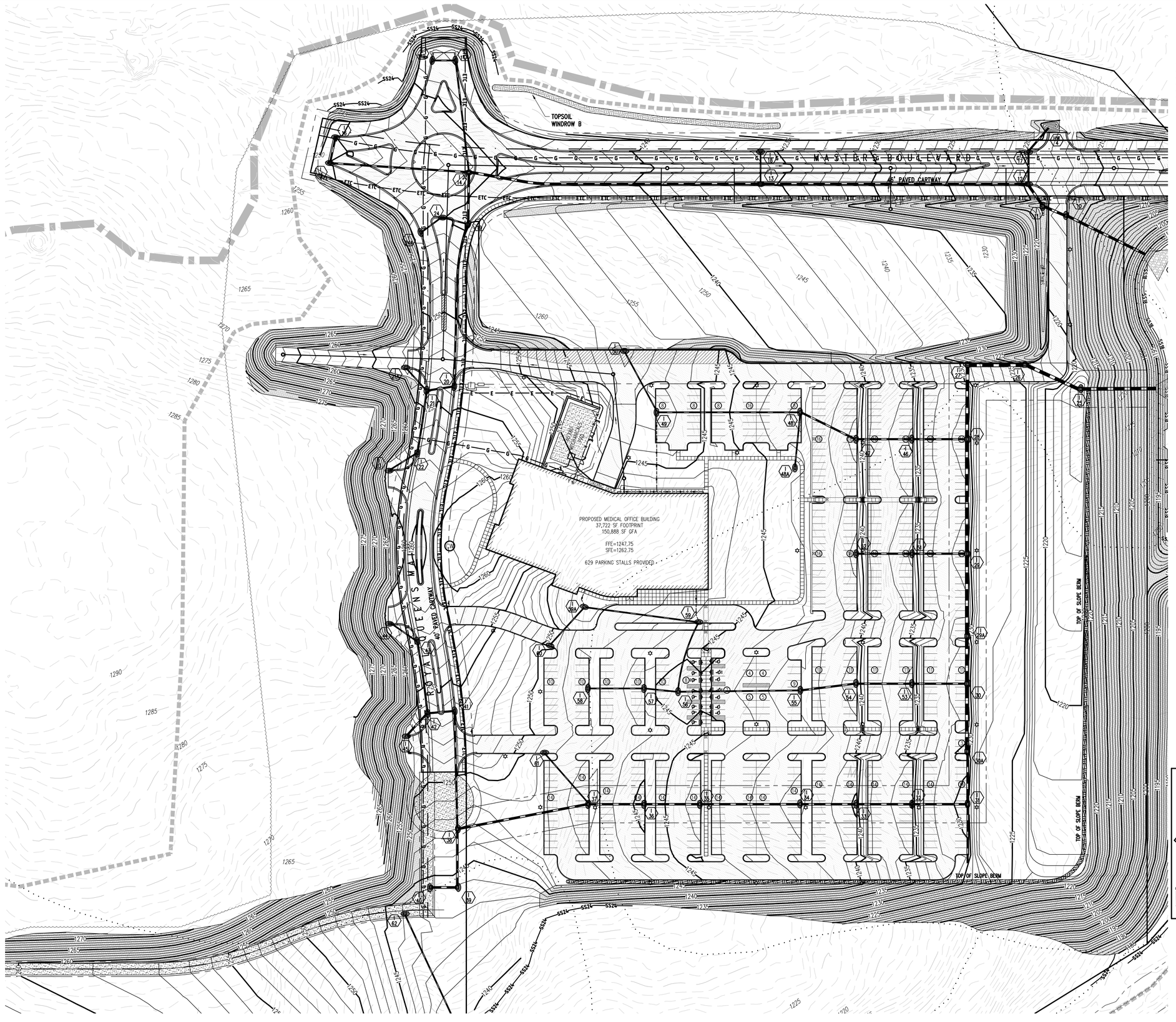

SURVEY FEATURES LEGEND

- Property Line, Lot Line or Right of Way Line
- Adjoining Property Line

SOILS LEGEND

Soil cover on the site consists of:

LvB – Leetonia sand, variant 3%-8% Slopes
MrB – Morrison sandy loam, 2%-8% Slopes
MrC – Morrison sandy loam, 8%-15% Slopes
MrD – Morrison sandy loam, 15%-25% Slopes
MTF – Morrison very stony loam, steep
WyA – Wyoming gravelly sand loam, rarely flooded, 0 to 5 percent slopes

EXISTING FEATURES LEGEND

- Existing Building
- Existing Curbing & Edge of Pavement
- Existing Concrete Areas
- 1109 Existing Contours w/ Elevation (1's & 2's)
- 1110 Existing Contours w/ Elevation (5's & 10's)
- Existing Sanitary Sewer w/ Manhole
- Existing Sanitary Sewer Lateral w/ Clean Out
- Existing Water Line w/ Valve
- Existing Water Service Lateral
- Existing Storm Sewer Line w/ Inlet
- G Existing Gas Line
- E Existing Underground Electric
- T Existing Underground Telephone
- TV Existing Underground TV Cable
- Existing Overhead Utility Line w/ Pole
- Existing Fire Hydrant
- Existing Soil Limit Line / Boundary
- HaB Existing Soil Type
- Existing Tree Row
- Existing Stream
- Existing Floodplain
- Delineated Wetlands Line

PROPOSED FEATURES LEGEND

- PROPOSED BUILDING
- PROPOSED CURBING & EDGE OF PAVEMENT
- PROPOSED CONCRETE SIDEWALK
- PROPOSED CONCRETE AREAS
- PROPOSED BITUMINOUS PAVEMENT AREAS
- 1109 PROPOSED MINOR CONTOURS W/ ELEVATION (1's & 2's)
- 1110 PROPOSED MAJOR CONTOURS W/ ELEVATION (5's & 10's)
- PROPOSED 8" SANITARY SEWER W/ MANHOLE
- PROPOSED 6" PVC SANITARY SEWER LATERAL W/ CLEAN OUT
- PROPOSED 8" WATER LINE W/ VALVE
- CB W PROPOSED WATER SERVICE LATERAL W/ CURB BOX
- PROPOSED STORM SEWER W/ TYPE C INLET
- G G PROPOSED GAS LINE
- ETC ETC PROPOSED COMBINED UTILITY CONDUIT
- PROPOSED STORM SEWER INLET – TYPE M
- PROPOSED STORM SEWER INLET – TYPE C
- PROPOSED TREE ROW
- 14'0" PROPOSED PAINTED HANDICAPPED PARKING SYMBOLS
- 13 PROPOSED PARKING STALL COUNT
- DEPRESSED CURB TRANSITION CURB PROPOSED DEPRESSED CURB W/ CURB TRANSITION

EROSION & SEDIMENTATION CONTROL LEGEND

- NPDES BOUNDARY LINE
- LIMIT OF DISTURBANCE
- ORANGE CONSTRUCTION FENCE
- TOPSOIL WINDROW
- CONSTRUCTION ENTRANCE
- INLET PROTECTION
- RIP-RAP APRON
- EROSION CONTROL LINING (CURLEX I OR APPROVED EQUAL)
- EROSION CONTROL LINING (CURLEX III OR APPROVED EQUAL)
- TOPSOIL STOCKPILE TOPSOIL STOCKPILE
- CW CONCRETE WASHOUT AREA
- SS18 SS18 18" SILT SOCK
- SS24 SS24 24" SILT SOCK

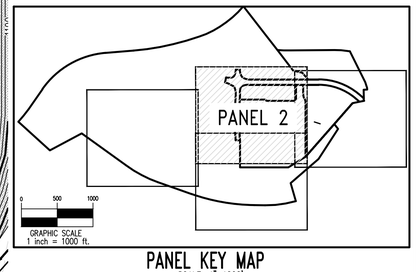

PANEL KEY MAP
SCALE: 1"=1000'

GRAPHIC SCALE
60 0 30 60 120 240
(IN FEET)
1 inch = 60 ft.

PennTerra ENGINEERING INC.
CENTRAL PENNSYLVANIA REGION OFFICE:
3075 ENTERPRISE DRIVE
SUITE 100
STATE COLLEGE, PA 16801
PH: 814-231-8285
Fax: 814-237-2308

LANCASTER REGION OFFICE:
3904 B ABEL DRIVE
COLUMBIA, PA 17512
PH: 717-522-5031
Fax: 717-522-5046

WWW.PENNTERRA.COM

COPYRIGHT 2021 BY THE ENGINEER
THE INFORMATION CONTAINED HEREON MAY NOT BE USED OR COPIED IN ANY MANNER WITHOUT THE WRITTEN PERMISSION OF THE ENGINEER EXCEPT AS OTHERWISE PROVIDED BY APPROPRIATE LAWS OR STATUTES.
© PENNTERRA ENGINEERING 2021 ALL RIGHTS RESERVED

COMMONWEALTH OF PENNSYLVANIA REGISTERED PROFESSIONAL C. ANTHONY FRUCHTL ENGINEER PE-062413

Designer	EAH
Draftsman	EAH
ProjManager	CAF
Surveyor	BRK
Perimeter Ck.	
Book	463 Pg 1
File	19286.01-PCSMP-ES-PANEL-2
Layout	ES-PANEL 2

Date	Description
	REVISIONS

TOFTREES PLANNED COMMUNITY WEST MOUNT NITTANY HEALTH OUTPATIENT CENTER

PATTON TOWNSHIP
CENTRE COUNTY
PENNSYLVANIA

FINAL LAND DEVELOPMENT PLAN

EROSION AND SEDIMENTATION CONTROL PLAN – STAGE B – PANEL 2

PROJECT NO.	19286.01
DATE	NOVEMBER 5, 2021
SCALE	1"=60'
SHEET NO.	ES4

P:\ldd\prop\2019\19286\19286.01 - Phase 1\Design\not files\final plans\19286.01-PCSMP-ES-PANEL-2.dwg, 11/5/2021 11:29:19 AM, 1:1

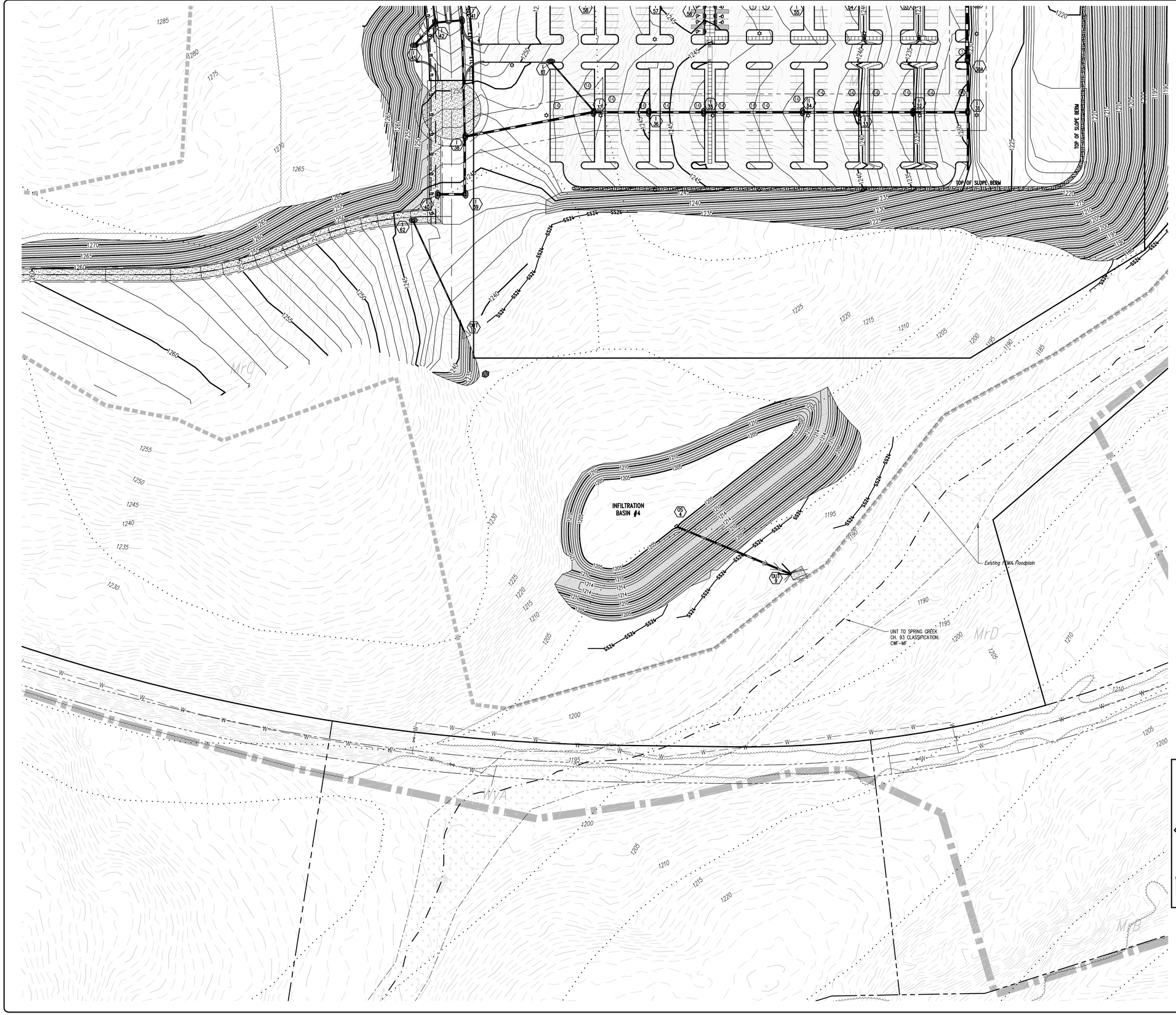

SURVEY FEATURES LEGEND

- Property Line, Lot Line or Right of Way Line
- Adjoining Property Line

SOILS LEGEND

Soil cover on the site consists of:

- LvB – Leetonia sand, variant 3%-8% Slopes
- MrB – Morrison sandy loam, 2%-8% Slopes
- MrC – Morrison sandy loam, 8%-15% Slopes
- MrD – Morrison sandy loam, 15%-25% Slopes
- MTF – Morrison very stony loam, steep
- WyA – Wyoming gravelly sand loam, rarely flooded, 0 to 5 percent slopes

EXISTING FEATURES LEGEND

- EXISTING BUILDING — Existing Building
- Existing Curbing & Edge of Pavement
- Existing Concrete Areas
- 1109 — Existing Contours w/ Elevation (1's & 2's)
- 1110 — Existing Contours w/ Elevation (5's & 10's)
- S — Existing Sanitary Sewer w/ Manhole
- CO — S — Existing Sanitary Sewer Lateral w/ Clean Out
- W — Existing Water Line w/ Valve
- W — Existing Water Service Lateral
- Existing Storm Sewer Line w/ Inlet
- G — Existing Gas Line
- E — Existing Underground Electric
- T — Existing Underground Telephone
- TV — Existing Underground TV Cable
- Ø — Existing Overhead Utility Line w/ Pole
- Existing Fire Hydrant
- Existing Soil Limit Line / Boundary
- HaB — Existing Soil Type
- Existing Tree Row
- Existing Stream
- Existing Floodplain
- Delineated Wetlands Line

PROPOSED FEATURES LEGEND

- PROPOSED BUILDING — PROPOSED BUILDING
- PROPOSED CURBING & EDGE OF PAVEMENT
- PROPOSED CONCRETE SIDEWALK
- PROPOSED CONCRETE AREAS
- PROPOSED BITUMINOUS PAVEMENT AREAS
- 1109 — PROPOSED MINOR CONTOURS W/ ELEVATION (1's & 2's)
- 1110 — PROPOSED MAJOR CONTOURS W/ ELEVATION (5's & 10's)
- PROPOSED 8" SANITARY SEWER W/ MANHOLE
- PROPOSED 6" PVC SANITARY SEWER LATERAL W/ CLEAN OUT
- PROPOSED 8" WATER LINE W/ VALVE
- CB — W — PROPOSED WATER SERVICE LATERAL W/ CURB BOX
- PROPOSED STORM SEWER W/ TYPE C INLET
- G — G — PROPOSED GAS LINE
- ETC — ETC — PROPOSED COMBINED UTILITY CONDUIT
- PROPOSED STORM SEWER INLET – TYPE M
- PROPOSED STORM SEWER INLET – TYPE C
- PROPOSED TREE ROW
- VAN — PROPOSED PAINTED HANDICAPPED PARKING SYMBOLS
- 15 — PROPOSED PARKING STALL COUNT
- DEPRESSED CURB TRANSITION CURB — PROPOSED DEPRESSED CURB W/ CURB TRANSITION

EROSION & SEDIMENTATION CONTROL LEGEND

- NPDES BOUNDARY LINE
- LIMIT OF DISTURBANCE
- ORANGE CONSTRUCTION FENCE
- TOPSOIL WINDROW
- CONSTRUCTION ENTRANCE
- INLET PROTECTION
- RIP-RAP APRON
- EROSION CONTROL LINING (CURLEX I OR APPROVED EQUAL)
- EROSION CONTROL LINING (CURLEX III OR APPROVED EQUAL)
- TOPSOIL STOCKPILE — TOPSOIL STOCKPILE
- CW — CONCRETE WASHOUT AREA
- SS18 — SS18 — 18" SILT SOCK
- SS24 — SS24 — 24" SILT SOCK

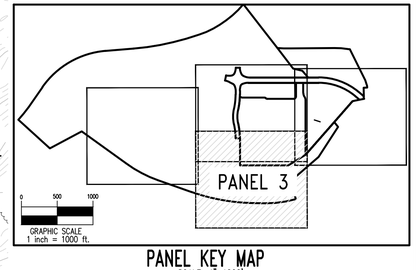

PANEL KEY MAP
SCALE: 1"=1000'

GRAPHIC SCALE
60 0 30 60 120 240
(IN FEET)
1 inch = 60 ft.

PennTerra ENGINEERING INC.

CENTRAL PENNSYLVANIA REGION OFFICE:
3075 ENTERPRISE DRIVE
SUITE 100
STATE COLLEGE, PA 16801
PH: 814-231-8285
Fax: 814-237-2308

LANCASTER REGION OFFICE:
3904 B ABEL DRIVE
COLUMBIA, PA 17512
PH: 717-522-5031
Fax: 717-522-5046

WWW.PENNTERRA.COM

COPYRIGHT 2021 BY THE ENGINEER
THE INFORMATION CONTAINED HEREON MAY NOT BE USED OR COPIED IN ANY MANNER WITHOUT THE WRITTEN PERMISSION OF THE ENGINEER EXCEPT AS OTHERWISE PROVIDED BY APPROPRIATE LAWS OR STATUTES.
© PENNTERRA ENGINEERING 2021
ALL RIGHTS RESERVED

COMMONWEALTH OF PENNSYLVANIA — REGISTERED PROFESSIONAL — C. ANTHONY FRUCHTL — ENGINEER — PE-062413

Designer	EAH
Draftsman	EAH
Proj.Manager	CAF
Surveyor	BRK
Perimeter Ck.	
Book	463 Pg 1
File	19286.01-PCSMP-ES-PANEL-3
Layout	ES-PANEL 3

Date	Description

REVISIONS

TOFTREES PLANNED COMMUNITY WEST MOUNT NITTANY HEALTH OUTPATIENT CENTER

PATTON TOWNSHIP
CENTRE COUNTY
PENNSYLVANIA

FINAL LAND DEVELOPMENT PLAN

EROSION AND SEDIMENTATION CONTROL PLAN – STAGE B – PANEL 3

PROJECT NO.	19286.01
DATE	NOVEMBER 5, 2021
SCALE	1"=60'
SHEET NO.	ES5

P:\ltdtproj\2019\19286\19286.01 - Phase 1\Design\plot files\final plans\19286.01-PCSMP-ES-PANEL-3.dwg, 11/5/2021 11:30:39 AM, 1:1



SURVEY FEATURES LEGEND

- Property Line, Lot Line or Right of Way Line
- Adjoining Property Line

SOILS LEGEND

Soil cover on the site consists of:

LvB – Leetonia sand, variant 3%-8% Slopes
MrB – Morrison sandy loam, 2%-8% Slopes
MrC – Morrison sandy loam, 8%-15% Slopes
MrD – Morrison sandy loam, 15%-25% Slopes
MTF – Morrison very stony loam, steep
WyA – Wyoming gravelly sand loam, rarely flooded, 0 to 5 percent slopes

EXISTING FEATURES LEGEND

- Existing Building
- Existing Curbing & Edge of Pavement
- Existing Concrete Areas
- Existing Contours w/ Elevation (1's & 2's)
- Existing Contours w/ Elevation (5's & 10's)
- Existing Sanitary Sewer w/ Manhole
- Existing Sanitary Sewer Lateral w/ Clean Out
- Existing Water Line w/ Valve
- Existing Water Service Lateral
- Existing Storm Sewer Line w/ Inlet
- Existing Gas Line
- Existing Underground Electric
- Existing Underground Telephone
- Existing Underground TV Cable
- Existing Overhead Utility Line w/ Pole
- Existing Fire Hydrant
- Existing Soil Limit Line / Boundary
- Existing Soil Type
- Existing Tree Row
- Existing Stream
- Existing Floodplain
- Delineated Wetlands Line

PROPOSED FEATURES LEGEND

- PROPOSED BUILDING
- PROPOSED CURBING & EDGE OF PAVEMENT
- PROPOSED CONCRETE SIDEWALK
- PROPOSED CONCRETE AREAS
- PROPOSED BITUMINOUS PAVEMENT AREAS
- PROPOSED MINOR CONTOURS W/ ELEVATION (1's & 2's)
- PROPOSED MAJOR CONTOURS W/ ELEVATION (5's & 10's)
- PROPOSED 8" SANITARY SEWER W/ MANHOLE
- PROPOSED 6" PVC SANITARY SEWER LATERAL W/ CLEAN OUT
- PROPOSED 8" WATER LINE W/ VALVE
- PROPOSED WATER SERVICE LATERAL W/ CURB BOX
- PROPOSED STORM SEWER W/ TYPE C INLET
- PROPOSED GAS LINE
- PROPOSED COMBINED UTILITY CONDUIT
- PROPOSED STORM SEWER INLET – TYPE M
- PROPOSED STORM SEWER INLET – TYPE C
- PROPOSED TREE ROW
- PROPOSED PAINTED HANDICAPPED PARKING SYMBOLS
- PROPOSED PARKING STALL COUNT
- PROPOSED DEPRESSED CURB W/ CURB TRANSITION

EROSION & SEDIMENTATION CONTROL LEGEND

- NPDES BOUNDARY LINE
- LIMIT OF DISTURBANCE
- ORANGE CONSTRUCTION FENCE
- TOPSOIL WINDROW
- CONSTRUCTION ENTRANCE
- INLET PROTECTION
- RIP-RAP APRON
- EROSION CONTROL LINING (CURLEX I OR APPROVED EQUAL)
- EROSION CONTROL LINING (CURLEX III OR APPROVED EQUAL)
- TOPSOIL STOCKPILE
- CONCRETE WASHOUT AREA
- 18" SILT SOCK
- 24" SILT SOCK

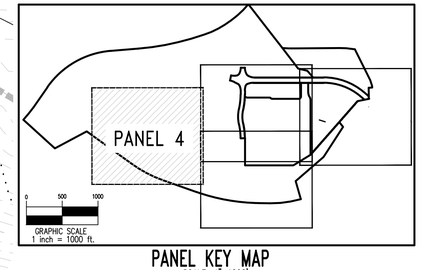

PANEL KEY MAP
SCALE: 1"=1000'

GRAPHIC SCALE

60 0 30 60 120 240

(IN FEET)
1 inch = 60 ft.

PennTerra ENGINEERING INC.

CENTRAL PENNSYLVANIA REGION OFFICE:
3075 ENTERPRISE DRIVE
SUITE 100
STATE COLLEGE, PA 16801
PH: 814-231-8285
Fax: 814-237-2308

LANCASTER REGION OFFICE:
3904 B ABEL DRIVE
COLUMBIA, PA 17512
PH: 717-522-5031
Fax: 717-522-5046

WWW.PENNTERRA.COM

COPYRIGHT 2021 BY THE ENGINEER
THE INFORMATION CONTAINED HEREON MAY NOT BE USED OR COPIED IN ANY MANNER WITHOUT THE WRITTEN PERMISSION OF THE ENGINEER EXCEPT AS OTHERWISE PROVIDED BY APPROPRIATE LAWS OR STATUTES.
© PENNTERRA ENGINEERING 2021 ALL RIGHTS RESERVED

COMMONWEALTH OF PENNSYLVANIA
REGISTERED PROFESSIONAL
C. ANTHONY FRUCHTL
ENGINEER
PE-062413

Designer	EAH
Draftsman	EAH
Proj.Manager	CAF
Surveyor	BRK
Perimeter Ck.	
Book	463 Pg 1
File	19286.01-PCSMP-ES-PANEL-4
Layout	ES-PANEL 4

Date	Description

REVISIONS

TOFTREES PLANNED COMMUNITY WEST MOUNT NITTANY HEALTH OUTPATIENT CENTER

PATTON TOWNSHIP
CENTRE COUNTY
PENNSYLVANIA

FINAL LAND DEVELOPMENT PLAN

EROSION AND SEDIMENTATION CONTROL PLAN – STAGE B – PANEL 4

PROJECT NO.	19286.01
DATE	NOVEMBER 5, 2021
SCALE	1"=60'
SHEET NO.	ES6

P:\ldd\proj\2019\19286\19286.01 - Phase 1\Design\xref files\final plans\19286.01-PCSMP-ES-PANEL-4.dwg, 11/5/2021 11:31:52 AM, 1:1

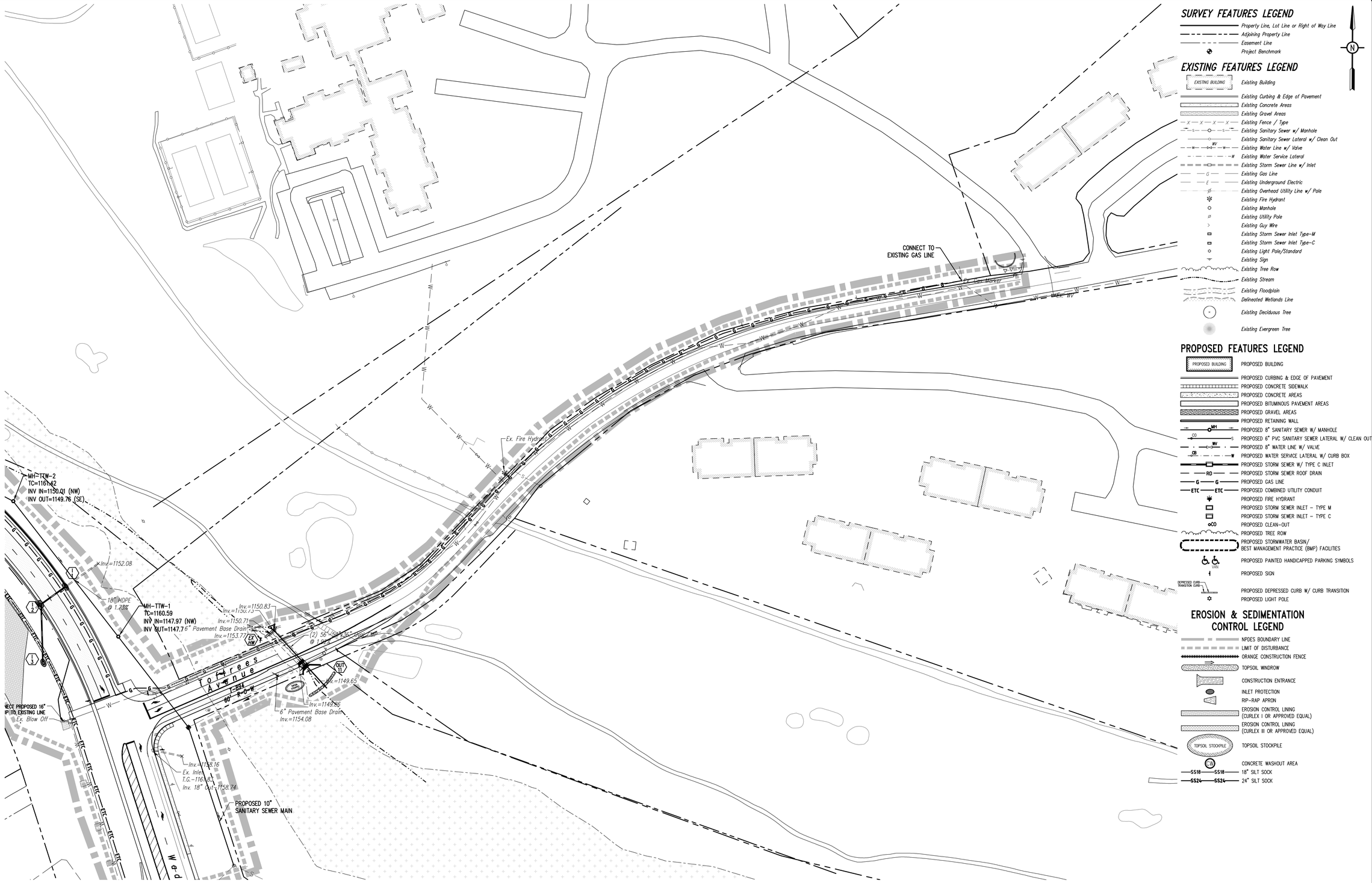

PennTerra ENGINEERING INC.

CENTRAL PENNSYLVANIA REGION OFFICE:
3075 ENTERPRISE DRIVE
SUITE 100
STATE COLLEGE, PA 16801
PH: 814-231-8285
Fax: 814-237-2308

LANCASTER REGION OFFICE:
3904 B ABEL DRIVE
COLUMBIA, PA 17512
PH: 717-522-5031
Fax: 717-522-5046

WWW.PENNTERRA.COM

COPYRIGHT 2021 BY THE ENGINEER
THE INFORMATION CONTAINED HEREON MAY NOT BE USED OR COPIED IN ANY MANNER WITHOUT THE WRITTEN PERMISSION OF THE ENGINEER EXCEPT AS OTHERWISE PROVIDED BY APPROPRIATE LAWS OR STATUES.
© PENNTERRA ENGINEERING 2021 ALL RIGHTS RESERVED

COMMONWEALTH OF PENNSYLVANIA
REGISTERED PROFESSIONAL
C. ANTHONY FRUCHTL
ENGINEER
PE-062413

Designer	EAH
Draftsman	EAH
ProjManager	CAF
Surveyor	BRK
Perimeter Ck.	
Book	463 Pg 1
File	19286.01-PCSMP-ES-GAS-EXTENSION
Layout	ES-GAS

Date	Description
	REVISIONS

TOFTREES PLANNED COMMUNITY WEST MOUNT NITTANY HEALTH OUTPATIENT CENTER

PATTON TOWNSHIP
CENTRE COUNTY
PENNSYLVANIA

FINAL LAND DEVELOPMENT PLAN

EROSION & SEDIMENTATION CONTROL PLAN - GAS LINE EXTENSION

PROJECT NO.	
19286.01	
DATE	
NOVEMBER 5, 2021	
SCALE	SHEET NO.
1"=60'	ES7

P:\ldd\proj\2019\19286\19286.01 - Phase 1\Design\plot files\final plans\19286.01-PCSMP-ES-GAS-EXTENSION.dwg, 11/5/2021 11:32:59 AM, 1:1

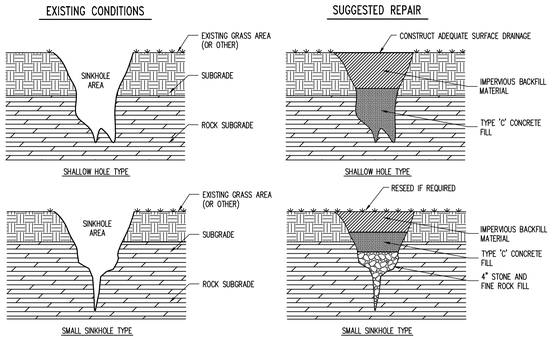

NOTE:
THESE DETAILS REPRESENT TYPICAL SINKHOLE SHAPES AND REPAIR TECHNIQUES. SINKHOLES VARY IN SIZE AND TYPE. THEREFORE, THE OWNER'S GEOTECHNICAL ENGINEER SHALL BE CONTACTED PRIOR TO FIELD REPAIR OF ANY SINKHOLE. (NOT INCLUDED IN UTILITY/EARTHWORK BASE BID)

SINKHOLE REPAIR
NOT TO SCALE

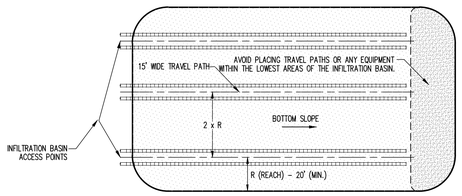

THIS DETAIL REPRESENTS A TYPICAL INFILTRATION BASIN BOTTOM EXCAVATION TECHNIQUE. EACH INFILTRATION BASIN VARIES WITH GEOMETRY AND OTHER VARIOUS PHYSICAL FEATURES. THE CONTRACTOR MUST DEVELOP A INFILTRATION BASIN BOTTOM EXCAVATION PLAN AND CONSULT WITH THE SITE ENGINEER PRIOR TO COMMENCING THE INFILTRATION BASIN BOTTOM EXCAVATION.

NOTES:

1. ALL EQUIPMENT MOBILIZATION AND MANEUVERS MUST BE LIMITED TO THE TRAVEL PATH LOCATIONS. THE CONTRACTOR SHALL LOCATE AND CLEARLY POST ALL TRAVEL PATHS IN THE FIELD.
2. TRAVEL PATH LOCATIONS SHALL BE SELECTED BASED UPON EQUIPMENT REACH CAPABILITY AND INFILTRATION BASIN GEOMETRY. TRAVEL PATH LOCATIONS SHOULD BE SELECTED SUCH THAT THEY PARALLEL THE LONGEST SIDE OF THE INFILTRATION BASIN.
3. TRAVEL PATH SPACING SHALL VARY WITH EQUIPMENT REACH CAPABILITY. REACH CAPABILITY SHOULD BE A MINIMUM OF 20 FEET.
4. MATERIAL SHALL BE REMOVED FROM THE TRAVEL PATH LOCATIONS WORKING TOWARD THE INFILTRATION BASIN ACCESS POINTS. ONCE MATERIAL IS REMOVED FROM EACH TRAVEL PATH LOCATION AND FINAL GRADE IS ACHIEVED, ALL EQUIPMENT SHALL BE PROHIBITED FROM THESE LOCATIONS.

TYPICAL INFILTRATION BASIN BOTTOM EXCAVATION
NOT TO SCALE

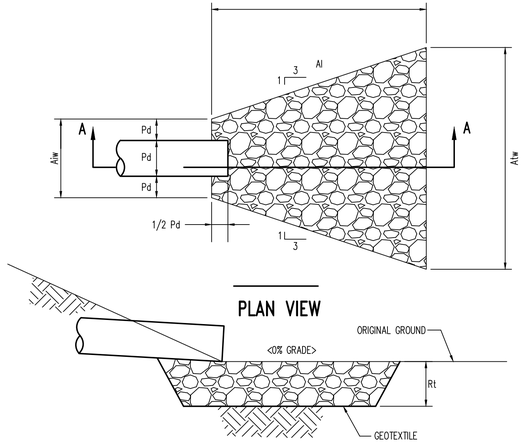

RIPRAP APRON AT PIPE OUTLET WITHOUT FLARED ENDWALL
NOT TO SCALE

OUTLET NO.	PIPE DIA Pd (IN)	RIPRAP SIZE (R-__)	RIPRAP THICK. Rt (IN)	APRON LENGTH Al (FT)	APRON INITIAL WIDTH Aiw (FT)	APRON TERMINAL WIDTH Atw (FT)
OUT-1	60"	R-6	36"	32.00'	15.00'	47.00'
OUT-2	18"	R-4	18"	8.00'	4.50'	12.50'
OUT-3	18"	R-4	18"	8.00'	4.50'	12.50'
OUT-4	18"	R-4	18"	8.00'	4.50'	12.50'
OUT-5	24"	R-4	18"	12.00'	6.00'	18.00'
OUT-6	48"	R-6	36"	28.00'	12.00'	40.00'
OUT-7	18"	R-4	18"	8.00'	4.50'	12.50'
OUT-8	48"	R-6	36"	28.00'	12.00'	40.00'
OUT-9	24"	R-4	18"	12.00'	6.00'	18.00'
OUT-10	18"	R-4	18"	8.00'	4.50'	12.50'

NOTES:
1. ALL APRONS SHALL BE CONSTRUCTED TO THE DIMENSIONS SHOWN. TERMINAL WIDTHS SHALL BE ADJUSTED AS NECESSARY TO MATCH RECEIVING CHANNELS.
2. ALL APRONS SHALL BE INSPECTED AT LEAST WEEKLY AND AFTER EACH RUNOFF EVENT. DISPLACED RIPRAP WITHIN THE APRON SHALL BE REPLACED IMMEDIATELY.
3. EXTEND RIPRAP ON BACK SIDE OF APRON TO AT LEAST ½ DEPTH OF PIPE ON BOTH SIDES TO PREVENT SCOUR AROUND THE PIPE.

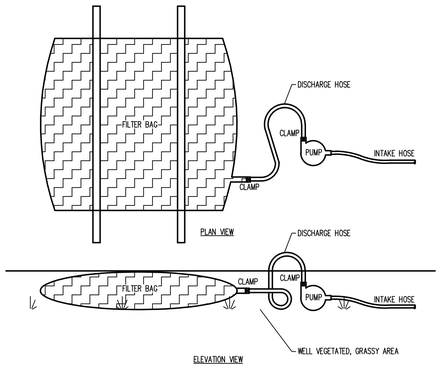

Low volume filter bags shall be made from non-woven geotextile material sewn with high strength, double stitched "J" type seams. They shall be capable of trapping particles larger than 150 microns. High volume filter bags shall be made from woven geotextiles that meet the following standards

Property	Test Method	Minimum Standard
Avg. Wide Width Strength	ASTM D-4884	60 lb/in
Grab Tensile	ASTM D-4632	205 lb
Puncture	ASTM D-4833	110 lb
Mullen Burst	ASTM D-3786	350 psi
UV Resistance	ASTM D-4355	70%
AOS % Retained	ASTM D-4751	80 Sieve

Notes:

1. A suitable means of accessing the bag with machinery required for disposal purposes shall be provided. Filter bags shall be replaced when they become ½ full of sediment. Spare bags shall be kept available for replacement of those that have failed or are filled. Bags shall be placed on straps to facilitate removal unless bags come with lifting straps already attached.

2. Bags shall be located in well-vegetated (grassy) area, and discharge onto stable, erosion resistant areas. Where this is not possible, a geotextile underlayment and flow path shall be provided. Bags may be placed on filter stone to increase discharge capacity. Bags shall not be placed on slopes greater than 5%. For slopes exceeding 5%, clean rock or other non-erodible and non-polluting material may be placed under the bag to reduce slope steepness.

3. No downslope sediment barrier is required for most installations. Compost berm or compost filter sock shall be installed below bags located in HQ or EV watersheds, within 50 feet of any receiving surface water or where grassy area is not available.

PUMPED WATER FILTER BAG DETAIL
NOTE: THIS DETAIL SHALL BE USED FOR PUMPING OF WATER FROM THE SITE
NOT TO SCALE

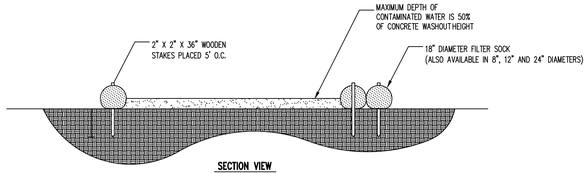

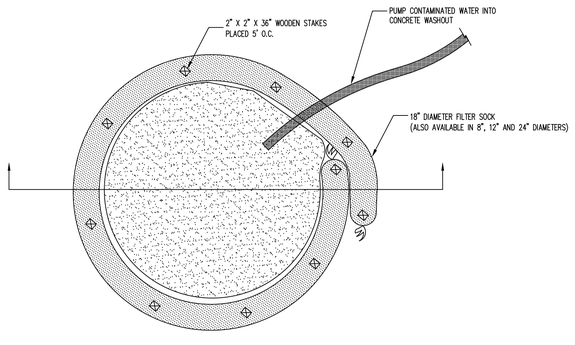

NOTES:
1. INSTALL ON FLAT GRADE FOR OPTIMUM PERFORMANCE.
2. CONCRETE WASHOUT MAY BE STACKED IN A PYRAMIDAL CONFIGURATION FOR ADDED HEIGHT AND STABILITY.
3. CONCRETE WASHOUT MAY BE DIRECT SEEDED AT THE TIME OF INSTALLATION.
4. A SUITABLE IMPERVIOUS GEOMEMBRANE SHALL BE PLACED AT THE LOCATION OF THE WASHOUT PRIOR TO INSTALLING THE FILTER SOCKS.

CONCRETE WASHOUT AREA
NOT TO SCALE

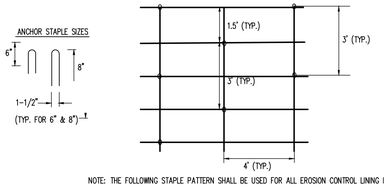

NOTE: THE FOLLOWING STAPLE PATTERN SHALL BE USED FOR ALL EROSION CONTROL LINING INSTALLATION.

TYPICAL ANCHORING PATTERN (1.1 STAPLES/YD^2)

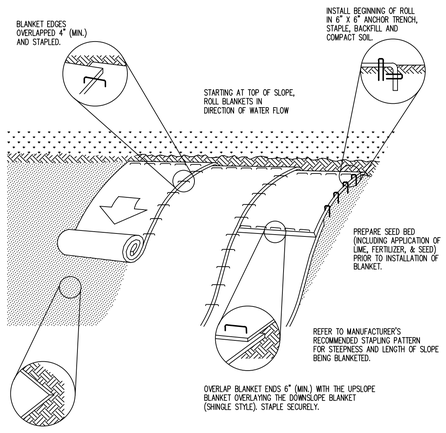

NOTES:
1. SEED AND SOIL AMENDMENTS SHALL BE APPLIED ACCORDING TO THE RATES IN THE PLAN DRAWINGS PRIOR TO INSTALLING THE BLANKET.

2. PROVIDE ANCHOR TRENCH AT TOE OF SLOPE IN SIMILAR FASHION AS AT TOP OF SLOPE.

3. SLOPE SURFACE SHALL BE FREE OF ROCKS, CLODS, STICKS, AND GRASS.

4. BLANKET SHALL HAVE GOOD CONTINUOUS CONTACT WITH UNDERLYING SOIL THROUGHOUT ENTIRE LENGTH. LAY BLANKET LOOSELY AND STAKE OR STAPLE TO MAINTAIN DIRECT CONTACT WITH SOIL. DO NOT STRETCH BLANKET.

5. THE BLANKET SHALL BE STAPLED IN ACCORDANCE WITH THE MANUFACTURER'S RECOMMENDATIONS.

6. BLANKETED AREAS SHALL BE INSPECTED WEEKLY AND AFTER EACH RUNOFF EVENT UNTIL PERENNIAL VEGETATION IS ESTABLISHED TO A MINIMUM UNIFORM 70% COVERAGE THROUGHOUT THE BLANKETED AREA. DAMAGED OR DISPLACED BLANKETS SHALL BE RESTORED OR REPLACED WITHIN 4 CALENDAR DAYS.

EROSION CONTROL BLANKET INSTALLATION
NOT TO SCALE

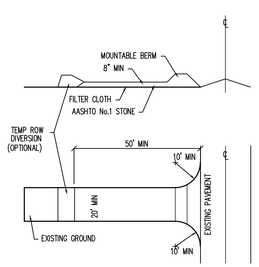

CONSTRUCTION ENTRANCE
NOT TO SCALE

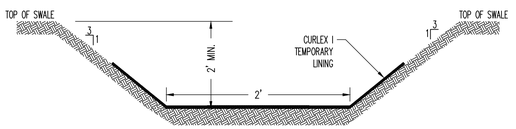

SWALE #1/#2 DETAIL
NOT TO SCALE

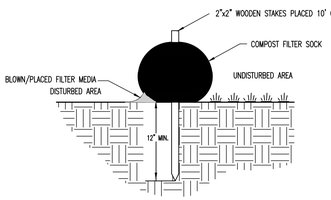

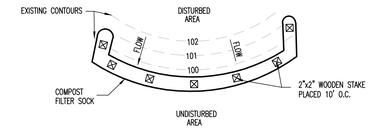

NOTES:
1. SOCK FABRIC SHALL MEET STANDARDS OF TABLE 4.1. COMPOST SHALL MEET THE STANDARDS OF TABLE 4.2.
2. SILT SOCK COMPOST/SOIL/ROCK/SEED FILL TO MEET APPLICATION REQUIREMENTS.
3. SILT SOCKS DEPICTED ARE FOR USE ON MINIMAL SLOPES. GREATER SLOPES MAY REQUIRE LARGER SILT SOCKS PER THE ENGINEER.
4. COMPOST MATERIAL TO BE DISPERSED ON SITE, AS DETERMINED BY ENGINEER.
5. TRAFFIC SHALL NOT BE PERMITTED TO CROSS FILTER SOCKS.
6. ACCUMULATED SEDIMENT SHALL BE REMOVED WHEN IT REACHES HALF THE ABOVEGROUND HEIGHT OF THE SOCK AND DISPOSED IN THE MANNER DESCRIBED ELSEWHERE IN THE PLAN.
7. SOCKS SHALL BE INSPECTED WEEKLY AND AFTER EACH RUNOFF EVENT. DAMAGED SOCKS SHALL BE REPAIRED ACCORDING TO MANUFACTURER'S SPECIFICATIONS OR REPLACED WITHIN 24 HOURS OF INSPECTION.
8. BIODEGRADABLE FILTER SOCKS SHALL BE REPLACED AFTER 6 MONTHS; PHOTODEGRADABLE SOCKS AFTER 1 YEAR. POLYPROPYLENE SOCKS SHALL BE REPLACED ACCORDING TO MANUFACTURER'S RECOMMENDATIONS.
9. UPON STABILIZATION OF THE AREA TRIBUTARY TO THE SOCK, STAKES SHALL BE REMOVED. THE SOCK MAY BE LEFT IN PLACE AND VEGETATED OR REMOVED. IN THE LATTER CASE, THE MESH SHALL BE CUT OPEN AND THE MULCH SPREAD AS A SOIL SUPPLEMENT.

TABLE 4.1
Compost Sock Fabric Minimum Specifications

Material Type	3 mil HDPE	5 mil HDPE	5 mil HDPE	Multi-Filament Polypropylene (MFPP)	Heavy Duty Multi-Filament Polypropelene (HDMFPP)
Material Characteristics	Photo-degradable	Photo-degradable	Bio-degradable	Photo-degradable	Photo-degradable
Sock Diameters	12" 18"	12" 18" 24" 32"	12" 18" 24" 32"	12" 18" 24" 32"	12" 18" 24" 32"
Mesh Opening	3/8"	3/8"	3/8"	3/8"	1/8"
Tensile Strength		26 psi	26 psi	44 psi	202 psi
Ultraviolet Stability % Original Strength (ASTM G-155)	23% at 1000 hr.	23% at 1000 hr.		100% at 1000 hr.	100% at 1000 hr.
Minimum Functional Longevity	6 months	9 months	6 months	1 year	2 years
Two-Ply Systems					
Inner Containment Netting				HDPE biaxial net	
				Continuously wound	
				Fusion-welded junctures	
				3/4"x3/4" Max. aperture size	
Outer Filtration Mesh				Composite Polypropylene Fabric (Woven layer and non-woven fleece mechanically fused via needle punch)	
				3/16" Max. aperture size	
Sock fabrics composed of burlap may be used on projects lasting 6 months or less.					

TABLE 4.2
Compost Standards

Organic Matter Content	25%-100% (dry weight basis)
Organic Portion	Fibrous and elongated
pH	5.5-8.5
Moisture Content	30%-60%
Particle Size	30%-50% pass through 3/8" sieve
Soluble Salt Concentration	5.0 dS/m (mmhos/cm) Maximum

COMPOST FILTER SOCK DETAIL
NOT TO SCALE

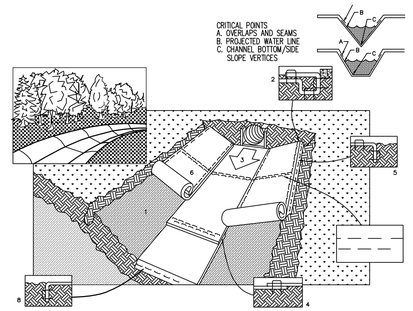

1. PREPARE SOIL BEFORE INSTALLING BLANKETS, INCLUDING APPLICATION OF LIME, FERTILIZER, AND SEED.
2. BEGIN AT THE TOP OF THE CHANNEL BY ANCHORING THE BLANKET IN A 6" DEEP X 6" WIDE TRENCH. BACKFILL AND COMPACT THE TRENCH AFTER STAPLING.
3. ROLL CENTER BLANKET IN DIRECTION OF WATER FLOW ON BOTTOM OF CHANNEL.
4. PLACE BLANKETS END OVER END (SHINGLE STYLE) WITH A 6" OVERLAP. USE A DOUBLE ROW OF STAGGERED STAPLES 4" APART TO SECURE BLANKETS.
5. FULL LENGTH EDGE OF BLANKETS AT TOP OF SIDE SLOPES MUST BE ANCHORED IN 6" DEEP X 6" WIDE TRENCH. BACKFILL AND COMPACT THE TRENCH AFTER STAPLING.
6. BLANKETS ON SIDE SLOPES MUST BE OVERLAPPED 4" OVER THE CENTER BLANKET AND STAPLED (2" FOR C350 MATTING).
7. IN HIGH FLOW CHANNEL APPLICATIONS, A STAPLE CHECK SLOT IS RECOMMENDED AT 30 TO 40 FOOT INTERVALS. USE A ROW OF STAPLES 4" APART OVER ENTIRE WIDTH OF THE CHANNEL. PLACE A SECOND ROW 4" BELOW THE FIRST ROW IN A STAGGERED PATTERN.
8. THE TERMINAL END OF THE BLANKETS MUST BE ANCHORED IN A 6" DEEP X 6" WIDE TRENCH. BACKFILL AND COMPACT THE TRENCH AFTER STAPLING.

CHANNEL LINING INSTALLATION
NOT TO SCALE

PennTerra ENGINEERING INC.
CENTRAL PENNSYLVANIA REGION OFFICE:
3075 ENTERPRISE DRIVE
SUITE 100
STATE COLLEGE, PA 16801
PH: 814-231-8285
Fax: 814-237-2308
LANCASTER REGION OFFICE:
3904 B ABEL DRIVE
COLUMBIA, PA 17512
PH: 717-522-5031
Fax: 717-522-5046
WWW.PENNTERRA.COM

COPYRIGHT 2021 BY THE ENGINEER
THE INFORMATION CONTAINED HEREON MAY NOT BE USED OR COPIED IN ANY MANNER WITHOUT THE WRITTEN PERMISSION OF THE ENGINEER EXCEPT AS OTHERWISE PROVIDED BY APPROPRIATE LAWS OR STATUTES.
© PENNTERRA ENGINEERING 2021
ALL RIGHTS RESERVED

COMMONWEALTH OF PENNSYLVANIA
REGISTERED PROFESSIONAL
C. ANTHONY FRUCHTL
ENGINEER
PE-062413

Designer EAH
Draftsman EAH
Proj.Manager CAF
Surveyor BRK
Perimeter Ck.
Book 463 Pg 1
File 19286.01-ES-DETAILS-1
Layout ES-DETAILS-1

Date Description
REVISIONS

TOFTREES PLANNED COMMUNITY WEST MOUNT NITTANY HEALTH OUTPATIENT CENTER

PATTON TOWNSHIP
CENTRE COUNTY
PENNSYLVANIA

FINAL LAND DEVELOPMENT PLAN

EROSION AND SEDIMENTATION CONTROL DETAILS

PROJECT NO.
19286.01
DATE
NOVEMBER 5, 2021
SCALE
N.T.S.
SHEET NO.
ES8

P:\ddpproj\2019\19286\19286.01 - Phase 1\Design\plot files\final plans\19286.01-ES-DETAILS-1.dwg, 11/5/2021 11:33:31 AM, 1:1

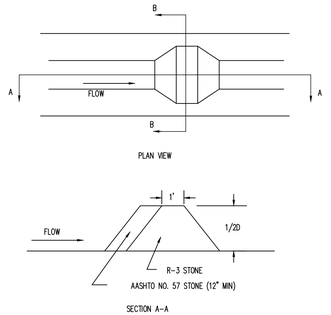

ROCK FILTER

NOT TO SCALE

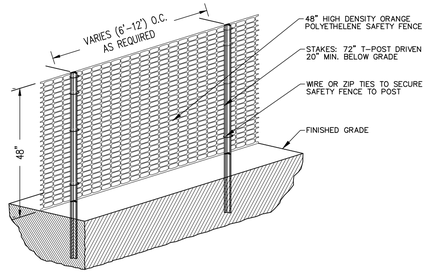

1. ALL SENSITIVE AREAS SHALL BE PROTECTED AS PER DEMOLITION & EROSION CONTROL PLANS.
2. ALL TREES IN THE CONSTRUCTION AREA NOT SPECIFICALLY DESIGNATED FOR REMOVAL SHALL BE PRESERVED AND PROTECTED WITH HIGH VISIBILITY FENCE AS PER PLAN.
3. WHEN PRACTICABLE, INSTALL HIGH VISIBILITY 3 FEET OUTSIDE OF THE DRIP LINE OF THE TREE.
4. SAFETY FENCE SHOULD BE FASTENED SECURELY TO THE T-POSTS.
5. THE FENCING MUST REMAIN IN PLACE DURING ALL PHASES OF CONSTRUCTION; ANY CHANGE OF THE PROTECTIVE FENCING MUST BE APPROVED.

TEMPORARY ORANGE CONSTRUCTION FENCE

NOT TO SCALE

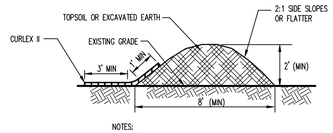

NOTES:

1. RUN LOADER OVER TOPS AND SIDES TO COMPACT AND SHAPE.
2. SEED AND MULCH WITH TEMPORARY MIXTURE.
3. INSTALL CURLEX II AS PER THE INSTALLATION NOTES SHOWN ON THE CURLEX II DETAIL.

TOPSOIL WINDROW

NOT TO SCALE

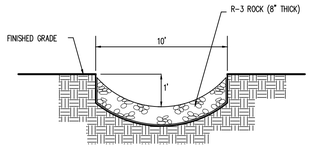

TEMPORARY STONE DIVERSION SWALE

NOT TO SCALE

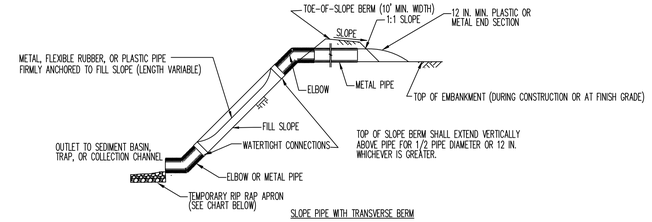

SLOPE PIPE WITH TRANSVERSE BERM

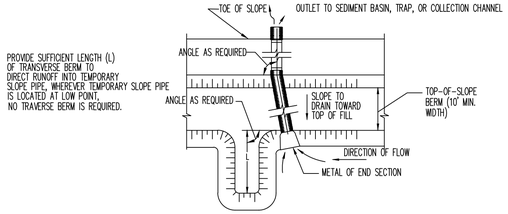

PLAN VIEW

SLOPE PIPE NO.	OUTLET PROTECTION TYPE	RIPRAP SIZE OR MATERIAL	APRON LENGTH (FT)	APRON WIDTH (FT)
*ALL	APRON	R-4	8	12.5

*CONTRACTOR MAY USE ONSITE ROCK AS THESE APRONS ARE TEMPORARY

NOTES:

THE MAXIMUM DISTANCE BETWEEN ANCHOR STAKES SHALL BE 10 FEET. TRANSVERSE BERM SHALL BE USED WHENEVER TEMPORARY SLOPE PIPE IS NOT LOCATED AT LOW POINT.

TEMPORARY SLOPE PIPE

NOT TO SCALE

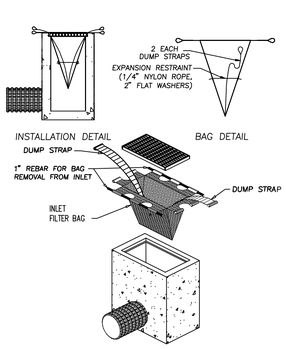

INLET FILTER BAG (TYPE M)

NOT TO SCALE

INLET FILTER BAG NOTES:

FILTER BAG SHOULD TRAP PARTICLES LARGER THAN 150 MICRONS.

WHEREVER FILTER BAGS ARE USED THEY SHOULD BE INSTALLED ACCORDING TO MANUFACTURERS SPECIFICATIONS.

INLET FILTER BAGS SHOULD BE INSPECTED ON A WEEKLY BASIS AND AFTER EACH RUNOFF EVENT.

FILTER BAGS SHOULD BE CLEANED AND/OR REPLACED WHEN BAG IS 1/2 FULL

DAMAGED FILTER BAGS SHOULD BE REPLACED.

NEEDED REPAIRS SHOULD BE INITIATED IMMEDIATELY AFTER THE INSPECTION.

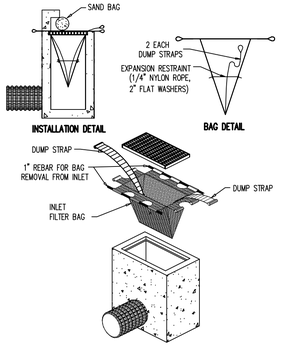

INLET FILTER BAG (TYPE C)

NOT TO SCALE

INLET FILTER BAG NOTES:

FILTER BAG SHOULD TRAP PARTICLES LARGER THAN 150 MICRONS.

WHEREVER FILTER BAGS ARE USED THEY SHOULD BE INSTALLED ACCORDING TO MANUFACTURERS SPECIFICATIONS.

INLET FILTER BAGS SHOULD BE INSPECTED ON A WEEKLY BASIS AND AFTER EACH RUNOFF EVENT.

FILTER BAGS SHOULD BE CLEANED AND/OR REPLACED WHEN BAG IS 1/2 FULL

DAMAGED FILTER BAGS SHOULD BE REPLACED.

NEEDED REPAIRS SHOULD BE INITIATED IMMEDIATELY AFTER THE INSPECTION.

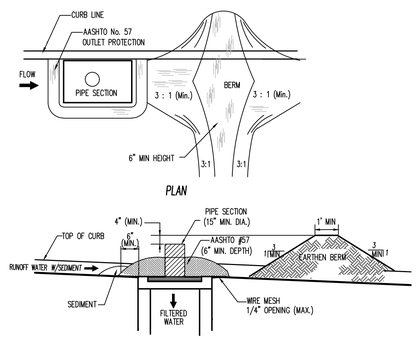

NOTE: USE 2-15" PIPE SECTIONS AT INLETS TS-1 AND TS-2

DROP INLET FILTER W/ EARTHEN BERM (TYPE C)

NOT TO SCALE

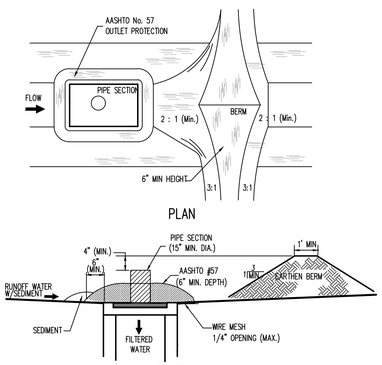

DROP INLET FILTER W/ EARTHEN BERM (TYPE M)

NOT TO SCALE

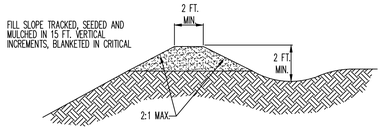

SECTION VIEW

NOTES:

1. TEMPORARY BERMS SHALL BE PLACED, MAINTAINED, AND ADJUSTED CONTINUOUSLY UNTIL 90% VEGETATIVE GROWTH IS ESTABLISHED ON THE EXTERIOR SLOPES WITH PERMANENT STORM DRAINAGE FACILITIES FUNCTIONING.
2. BERMS SHALL OUTLET TO SLOPE PIPES, CHANNELS, OR OTHER APPROVED MEANS OF CONVEYING RUNOFF TO A SEDIMENT TRAP, SEDIMENT BASIN, OR COLLECTOR CHANNEL.
3. CHANNEL BEHIND BERM SHALL HAVE POSITIVE GRADE TO OUTLET AND AN APPROPRIATE PROTECTIVE LINING.
4. BERM SHALL BE ADEQUATELY COMPACTED TO PREVENT FAILURE.
5. AN ACCEPTABLE ALTERNATIVE TO TOP-OF-SLOPE BERM IS TO CONTINUOUSLY GRADE THE TOP OF FILL TO DIRECT RUNOFF AWAY FROM THE FILLSLOPE TO A COLLECTOR CHANNEL, SEDIMENT TRAP, OR SEDIMENT BASIN.

TOP OF SLOPE BERM

NOT TO SCALE

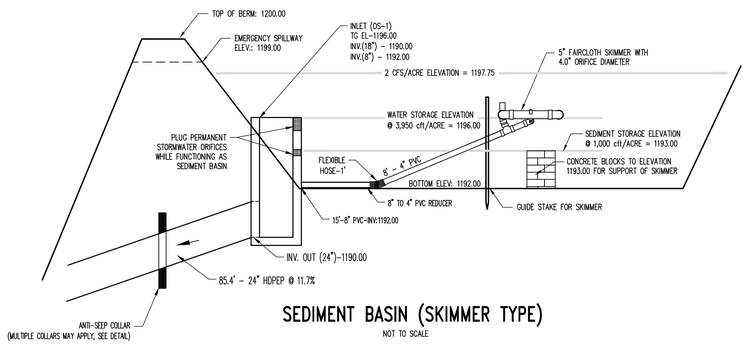

SEDIMENT BASIN (SKIMMER TYPE)

NOT TO SCALE

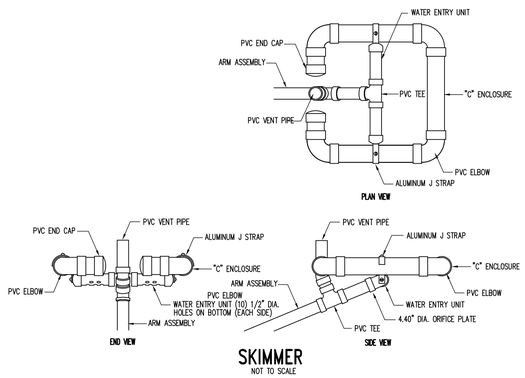

SKIMMER

NOT TO SCALE

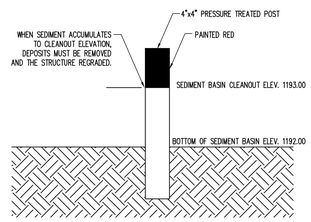

CLEANOUT MARKER SHALL BE PLACED HALF WAY BETWEEN POINTS OF CONCENTRATED INFLOW AND THE STRUCTURE OUTLET. WHEN SEDIMENT HAS ACCUMULATED TO CLEANOUT ELEVATION, IT MUST BE REMOVED TO RESTORE THE STRUCTURE TO ITS DESIGN CAPACITY.

CLENOUT MARKER DETAIL

NOT TO SCALE

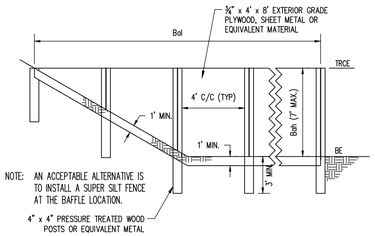

BASIN OR TRAP NO.	BAFFLE LENGTH Bal (FT)	BAFFLE HEIGHT Bah (FT)	TEMPORARY RISER CREST ELEV TRCE (FT)	BOTTOM BOTTOM ELEV BE (FT)
BASIN	156	4.00	1196.00	1192.00

- SEE APPROPRIATE BASIN DETAIL FOR PROPER LOCATION AND ORIENTATION.
- BAFFLES SHALL BE TIED INTO ONE SIDE OF THE BASIN UNLESS OTHERWISE SHOWN ON THE PLAN DRAWINGS.
- SUBSTITUTION OF MATERIALS NOT SPECIFIED IN THIS DETAIL SHALL BE APPROVED BY THE DEPARTMENT OR THE LOCAL CONSERVATION DISTRICT BEFORE INSTALLATION.
- DAMAGED OR WRAPPED BAFFLES SHALL BE REPLACED WITHIN 7 DAYS OF INSPECTION.
- BAFFLES REQUIRING SUPPORT POSTS SHALL NOT BE INSTALLED IN BASINS REQUIRING IMPERVIOUS LINERS.

TEMPORARY BAFFLE FOR SEDIMENT BASIN

NOT TO SCALE

PennTerra ENGINEERING INC.

CENTRAL PENNSYLVANIA REGION OFFICE:
3075 ENTERPRISE DRIVE
SUITE 100
STATE COLLEGE, PA 16801
PH: 814-231-8285
Fax: 814-237-2308

LANCASTER REGION OFFICE:
3904 B ABEL DRIVE
COLUMBIA, PA 17512
PH: 717-522-5031
Fax: 717-522-5046

WWW.PENNTERRA.COM

COPYRIGHT 2021 BY THE ENGINEER
THE INFORMATION CONTAINED HEREON MAY NOT BE USED OR COPIED IN ANY MANNER WITHOUT THE WRITTEN PERMISSION OF THE ENGINEER EXCEPT AS OTHERWISE PROVIDED BY APPROPRIATE LAWS OR STATUTES.
© PENNTERRA ENGINEERING 2021 ALL RIGHTS RESERVED

COMMONWEALTH OF PENNSYLVANIA — REGISTERED PROFESSIONAL — C. ANTHONY FRUCHTL — ENGINEER PE-062413

Designer EAH
Draftsman EAH
Proj.Manager CAF
Surveyor BRK
Perimeter Ck.
Book 463 Pg 1
File 19286.01-ES-DETAILS-2
Layout ES-DETAILS-2

Date	Description

REVISIONS

TOFTREES PLANNED COMMUNITY WEST MOUNT NITTANY HEALTH OUTPATIENT CENTER

PATTON TOWNSHIP
CENTRE COUNTY
PENNSYLVANIA

FINAL LAND DEVELOPMENT PLAN

EROSION AND SEDIMENTATION CONTROL DETAILS

PROJECT NO.
19286.01

DATE
NOVEMBER 5, 2021

SCALE
N.T.S.

SHEET NO.
ES9

P:\Utdtpnp\2019\19286\19286.01 - Phase 1\Design\pw files\final plans\19286.01-ES-DETAILS-2.dwg, 11/5/2021 11:33:47 AM, 1:1

Standard Erosion and Sedimentation Control Plan Notes

1. All earth disturbances, including clearing and grubbing as well as cuts and fills shall be done in accordance with the approved E&S plan. A copy of the approved drawings (stamped, signed and dated by the Centre County Conservation District) must be available at the project site at all times. The Centre County Conservation District shall be notified of any changes to the approved plan prior to implementation of those changes. The Centre County Conservation District may require a written submittal of those changes for review and approval at its discretion.
2. At least 7 days prior to starting any earth disturbance activities, including clearing and grubbing, the owner and/or operator shall invite all contractors, the landowner, appropriate municipal officials, the E&S plan preparer, the PCSM plan preparer, the licensed professional responsible for oversight of critical stages of implementation of the PCSM plan , and a representative from the Centre County Conservation District to an on-site preconstruction meeting.
3. At least 3 days prior to starting any earth disturbance activities, or expanding into an area previously unmarked, the Pennsylvania One Call System Inc. shall be notified at 1-800-242-1776 for the location of existing underground utilities.
4. All earth disturbance activities shall proceed in accordance with the sequence provided on the plan drawings. Deviation from that sequence must be approved in writing from the Centre County Conservation District or by the Department prior to implementation
5. Areas to be filled are to be cleared, grubbed, and stripped of topsoil to remove trees, vegetation, roots and other objectionable material.
6. Clearing, grubbing, and topsoil stripping shall be limited to those areas described in each stage of the construction sequence. General site clearing, grubbing and topsoil stripping may not commence in any stage or phase of the project until the E&S BMPs specified by the BMP sequence for that stage or phase have been installed and are functioning as described in this E&S plan.
7. At no time shall construction vehicles be allowed to enter areas outside the limit of disturbance boundaries shown on the plan maps. These areas must be clearly marked and fenced off before clearing and grubbing operations begin.
8. Topsoil required for the establishment of vegetation shall be stockpiled at the location(s) shown on the plan maps(s) in the amount necessary to complete the finish grading of all exposed areas that are to be stabilized by vegetation. Each stockpile shall be protected in the manner shown on the plan drawings. Stockpile heights shall not exceed 35 feet. Stockpile slopes shall be 2H:1V or flatter.
9. Immediately upon discovering unforeseen circumstances posing the potential for accelerated erosion and/or sediment pollution, the operator shall implement appropriate best management practices to minimize the potential for erosion and sediment pollution and notify the Centre County Conservation District and/or the regional office of the Department.
10. All building materials and wastes shall be removed from the site and recycled or disposed of in accordance with the Department's Solid Waste Management Regulations at 25 Pa. Code 260.1 et seq., 271.1, and 287.1 et. seq. No building materials or wastes or unused building materials shall be burned, buried, dumped, or discharge at the site.
11. All off-site waste and borrow areas must have an E&S plan approved by the Centre County Conservation District or the Department fully implemented prior to being activated.
12. The contractor is responsible for ensuring that any material brought on site is clean fill. Form FP-001 must be retained by the property owner for any fill material affected by a spill or release of a regulated substance by qualifying as clean fill due to analytical testing.
13. All pumping of water from any work area shall be done according to the procedure described in this plan, over undisturbed vegetated areas.
14. Until the site is stabilized, all erosion and sediment BMPs shall be maintained properly. Maintenance shall include inspections of all erosion and sediment BMPs after each runoff event and on a weekly basis. All preventative and remedial maintenance work, including clean out, repair, replacement, regrading, reseeding, remulching and renetting must be performed immediately. If the E&S BMPs fail to perform as expected, replacement BMPs, or modifications of those installed will be required.
15. A log showing dates that E&S BMPs were inspected as well as any deficiencies found and the date they were corrected shall be maintained on the site and be made available to regulatory agency officials at the time of inspection.
16. Sediment tracked onto any public roadway or sidewalk shall be returned to the construction site by the end of each work day and disposed in the manner described in this plan. In no case shall the sediment be washed, shoveled, or swept into any roadside ditch, storm sewer, or surface water.
17. All sediment removed from BMPs shall be disposed of in the manner described on the plan drawings.
18. Areas which are to be topsoiled shall be scarified to a minimum depth of 3 to 5 inches – 6 to 12 inches on compacted soils – prior to placement of topsoil. Areas to be vegetated shall have a minimum 4 inches of topsoil in place prior to seeding and mulching. Fill outslopes shall have a minimum of 2 inches of topsoil.
19. All fills shall be compacted as required to reduce erosion, slippage, settlement, subsidence or other related problems. Fill intended to support buildings, structures and conduits, etc. shall be compacted in accordance with local requirements or codes.
20. All earthen fills shall be placed in compacted layers not to exceed 9 inches in thickness.
21. Fill materials shall be free of frozen particles, brush, roots, sod, or other foreign or objectionable materials that would interfere with or prevent construction of satisfactory fills.
22. Frozen materials or soft, mucky, or highly compressible materials shall not be incorporated into fills.
23. Fill shall not be placed on saturated or frozen surfaces.
24. Seeps or springs encountered during construction shall be handled in accordance with the standard and specification for subsurface drain or other approved method.
25. All graded areas shall be permanently stabilized immediately upon reaching finished grade. Cut slopes in competent bedrock and rock fills need not be vegetated. Seeded areas within 50 feet of a surface water, or as otherwise shown on the plan drawings, shall be blanketed according to the standards of this plan.
26. Immediately after earth disturbance activities cease in any area or subarea of the project, the operator shall stabilize all disturbed areas. During non-germinating months, mulch or protective blanketing shall be applied as described in the plan. Areas not at finished grade, which will be reactivated within 1 year, may be stabilized in accordance with the temporary stabilization specifications. Those areas which will not be reactivated within 1 year shall be stabilized in accordance with the permanent stabilization specifications.
27. Permanent stabilization is defined as a minimum uniform, perennial 70% vegetative cover or other permanent non-vegetative cover with a density sufficient to resist accelerated erosion. Cut and fill slopes shall be capable of resisting failure due to slumping, sliding, or other movements.
28. E&S BMPs shall remain functional as such until all areas tributary to them are permanently stabilized or until they are replaced by another BMP approved by the Centre County Conservation District or the Department.
29. Upon completion of all earth disturbance activities and permanent stabilization of all disturbed areas, the owner and/or operator shall contact the Centre County Conservation District for an inspection prior to removal of the E&S BMPs.
30. After final site stabilization has been achieved, temporary erosion and sediment BMPs must be removed. Areas disturbed during removal of the BMPs shall be stabilized immediately. In order to ensure rapid revegetation of disturbed areas, such removal are to be done only during the germinating season.
31. Upon completion of all earth disturbance activities and permanent stabilization of all disturbed areas, the owner and/or operator shall contact the Centre County Conservation District to schedule a final inspection.
32. Failure to correctly install E&S BMPs, failure to prevent sediment-laden runoff from leaving the construction site, or failure to take immediate corrective action to resolve failure of E&S BMPs may result in administrative, civil, and/or criminal penalties being instituted by the Department as defined in Section 602 of the Pennsylvania Clean Streams Law. The Clean Streams Law provides for up to $10,000 per day in civil penalties, up to $10,000 in summary criminal penalties, and up to $25,000 in misdemeanor criminal penalties for each violation.
33. Concrete wash water shall be handled in the manner described on the plan drawings. In no case shall it be allowed to enter any surface waters or groundwater systems.
34. All channels shall be kept free of obstructions including but not limited to fill, rocks, leaves, woody debris, accumulated sediment, excess vegetation, and construction material/wastes.
35. Underground utilities cutting through any active channel shall be immediately backfilled and the channel restored to its original cross-section and protective lining. Any base flow within the channel shall be conveyed past the work area in the manner described in this plan until such restoration is complete.

General Construction Site Notes:

1.) All permanent and temporary seeding shall be done within 72 hours of the completion of disturbances for all areas requiring vegetative cover.
2.) Temporary and/or permanent grasses or stabilization shall be established in the sides and base of all earthen basins within 15 days of construction.
3.) In order to avoid compaction of the proposed infiltration basin bottoms, special procedures shall be implemented as follows:
a. The final excavation shall be completed utilizing equipment located outside the infiltration basin bottom area (if excavation cannot fully be completed from outside the bottoms, refer to the typical infiltration basin bottom excavation detail.)
4.) Prior to exiting the site, all construction vehicles must drive over the construction entrance.
5.) All disturbed slopes 3:1 and steeper shall be lined with adequate erosion control lining immediately after seeding.
6.) Silt Socks must be placed and maintained downslope of all topsoil stockpiles. Topsoil stockpiles must also be seeded with the temporary seeding mixture.
7.) All utility installation shall be done at a rate of which all trenching excavated shall be backfilled within the same day. All utility installation shall begin at the very downslope and precede upslope.
8.) Each item/step within the sequence of construction must be completed as presented prior to continuing the next step or phase of construction.
9.) The contractor is responsible for preparing and implementing any required PPC plans associated with the construction of the site.
10.) Failure to correctly install sediment control facilities or failure to prevent sediment laden runoff from leaving the construction site or failure to take corrective actions to immediately resolve failures of sediment control facilities may result in administrative, civil and/or criminal penalties being instituted by the Pennsylvania Department of Environmental Protection as defined in Section 602 of the Clean Streams Law of Pennsylvania. The Clean Streams Law provides for up to $10,000 per day in civil penalties, up to $10,000 in summary criminal penalties, and up to $25,000 in misdemeanor criminal penalties for each violation.

Staging of Earthmoving Activities Construction Sequence

All earth disturbance activities shall proceed in accordance with the following staging of earthmoving activities. Each stage shall be completed before a subsequent stage is initiated.

A. Install rock construction entrance for the site off of Waddle Road as shown on the Erosion and Sedimentation Control Plan (E&SCP) and Detail Sheet. This will only be used to construct the minor road crossing in step 'O'.

B. Place orange construction fence around Wetland #1 area.

C. Install all silt sock as shown on the Erosion and Sedimentation Control Plan (E&SCP) and Detail Sheet.

D. Install the second rock construction entrance, construction laydown area, topsoil stockpile, temporary swale & culvert, and concrete washout area. Site work can commence utilizing this construction entrance and existing gravel access road prior to the place of the minor road crossing (GP-7) and subsequent removal of the existing pipe in step 'O'.

E. Proceed to plans titled Stage A of Construction which is depicted on sheet ES-1 and ES-2.

F. Place topsoil window A and B within the project area and temporary slope pipe to the sediment basin.

G. Within the area of Sediment Basin and Infiltration Basin 2 & 3, begin stripping of topsoil and place on topsoil stockpiles. Place silt sock downslope of the stockpile. Rough grading can commence of these facilities.

H. Install the sediment basin and temporary discharge pipe from OS-1 to OS-1A to Temp Outfall. Do not connect/install the pipe from OS-1A to Out-5. This will be done during final sediment basin conversion. Install all basin outlet structure, anti-seep collar, skimmer device, baffles and cleanout stake. Do not compact the basin bottom area. Follow the typical infiltration basin bottom construction detail.

I. Once the sediment basin is complete, begin rough grading of the access road as shown on ES-1 and ES-2.

J. Install storm sewer network from I-11 to Out-8, I-25 to Out-6 and I-8 to Out-7. Place headwalls and riprap aprons.

K. Install swale #1 and all temporary stone division swales that convey runoff to the sediment basin.

L. Proceed to Stage B which is depicted on Sheets ES-3, ES-4, ES-5 and ES-6.

M. Begin rough grading and cut/fill operations on the entire site. Ensure all runoff is directed to topsoil windrow A and subsequent top of slope pipe or to swale #1 and subsequent inlet I-11. Topsoil windrow A shall remain functional for the entire bulk cut-fill operations. The window may be raised in elevation as constructions moves forward, but sediment runoff to the basin must be maintained until the site stormsewer is functional to inlet I-25.

N. Final grade and construct Infiltration Basin #2 & #3. Install the outlet structure pipes, anti-seep collars and riprap apron. Do not compact the basin bottom area. Follow the typical infiltration basin bottom construction detail. When grading is complete immediately place permanent seeding mixture on all disturbed surfaces and place silt sock around the basin bottom as shown on the E&SCP.

O. Begin construction of the GP-7 road crossing and utility placement.

P. Install coffer dam and bypass pump system for the installation of the GP-7 culvert.

Q. Within the area of the 60" culvert begin stripping of topsoil and place on topsoil stockpile. Place silt sock downslope of the stockpile.

R. Install all utilities as shown on the GP-7 plan and profile sheets.

S. Install proposed headwalls and dual 60" culvert system for the GP-7. Remove the existing culvert when enough of the proposed culvert is installed to gain access to the site. Place pump discharge from coffer dam to the existing stream to allow for new channel grading. Grade new channel downslope of the 60" pipe. Place erosion control lining and permanent seeding mixture. Leave coffer dam and pump bypass in place until the channel is stabilized.

T. This GP-7 minor road crossing being complete will now serve as the main access to finish the remainder of the site work. This will now be the sole rock construction entrance for the site.

U. Place riprap at the upslope and downslope entrance and exit of pipe.

V. Finalize grading operations within 100' offset of the 60" pipe system and place permanent seeding mixture.

W. When the downslope channel is to a uniform 70% vegetated cover, the coffer dam and bypass pipe can be removed.

X. Continue site cut/fill operations.

Y. Begin all site utility installations working from the very downslope of each line and proceeding upslope. The amount of utility installation shall coincide with the amount of trenching that can be excavated and backfilled daily. Install inlet protection on all inlets, as shown on the E&SCP.

Z. Place stone subbase on the access drive and parking lot areas.

AA. Building construction can be started in conjunction with all the misc utility installations at this time.

BB. Construction of Infiltration Basin #4 can commence. Install the outlet structure pipes, anti-seep collars and riprap aprons. Do not compact the basin bottom area. Follow the typical infiltration basin bottom construction detail. When grading is complete immediately place permanent seeding mixture on all disturbed surfaces and place silt sock around the basin bottom as shown on the E&SCP.

CC. Continue with final site grading.

DD. Once all roadway and parking areas are stabilized with stone, remove the construction entrance. Commence all paving and curbing installation.

EE. As all lawn areas are brought to grade, stabilize these areas immediately with topsoil and the permanent seeding mixture.

FF. Check all erosion controls on a daily basis and make any needed repairs or replacements as needed immediately. Any erosion control disturbed or removed by the installation of utilities shall be repaired or replaced to proper functioning condition by the end of that same day.

GG. Current regulations state: (a) Upon completion of an earth disturbance activity or any stage or phase of an activity, the site shall be immediately seeded, mulched or otherwise protected from accelerated erosion and sedimentation. (b) Erosion and sediment control BMP's shall be implemented and maintained until the permanent stabilization is completed. (c) For an earth disturbance activity or any stage or phase of an activity to be considered permanently stabilized, the disturbed areas shall be covered with one of the following: (1) A minimum uniform 70% perennial vegetative cover, with a density capable of resisting accelerated erosion and sedimentation. (2) An acceptable BMP which permanently minimizes accelerated erosion and sedimentation. (3) Pavement, curbing and sidewalk, where applicable. Once stabilization has been achieved, all temporary erosion and sediment controls may be removed. These controls include inlet protection, topsoil stockpiles/windrows, silt sock and sediment basin. Stabilize any areas disturbed by the removal of these controls immediately with the permanent seeding mixture.

INFILTRATION BASIN#1/SEDIMENT BASIN FINAL CONVERSION

1. Remove all sediments (in accordance with general site note #3 above) and construct the basin to the final grade as shown on the Post Construction Stormwater Management (PCSM) Grading Plans.
2. Remove skimmer device, baffles and modify outlet structure and emergency spillway to PCSM outlet configuration.
3. Place pipe from OS-1A to Out 5. Install riprap apron.
4. Abandon pipe from OS-1-A to temporary sediment basin discharge. Plug both ends of the pipe.
5. Place a minimum of 6" of amended topsoil within the basin bottom area. A licensed soil scientist shall approve the amended topsoil mixture and subgrade. Place specific basin bottom permanent seeding and other permanent seeding mixtures on side slopes where necessary.

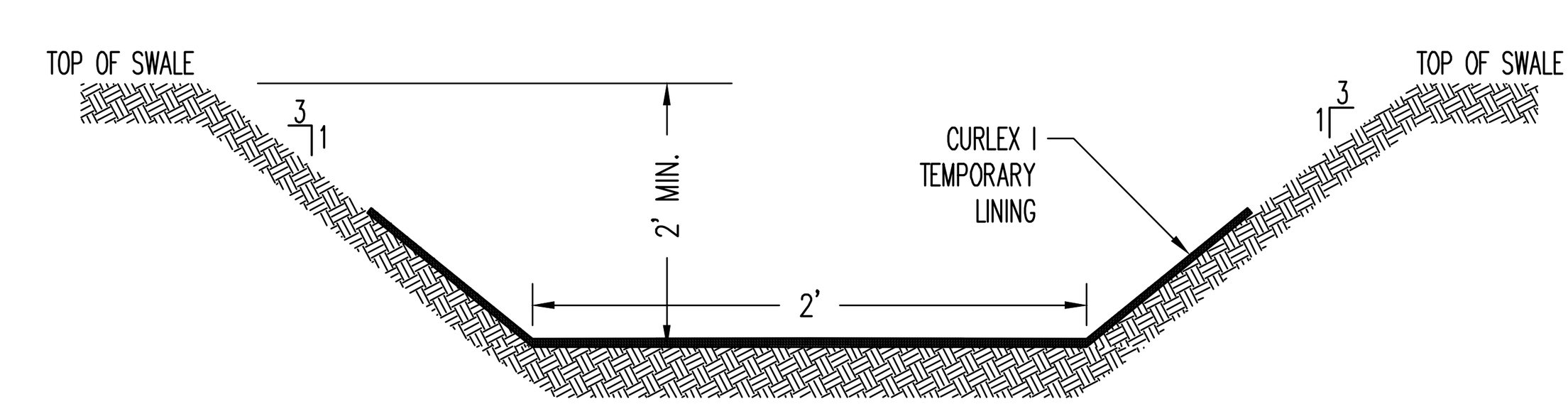

TEMPORARY SWALE DETAIL

NOT TO SCALE

Temporary Control Measures

Temporary control measures will be implemented to ensure that erosion is minimized and that sediment is retained during construction. The rock construction entrance and construction entrance rumble pads (if necessary) will be provided at the site entrance to prevent tracking of sediment from the site. Silt sock will be placed at the locations shown on the Erosion and Sedimentation Control Plan to provide proper filtration of the site runoff. Erosion control lining will be installed to help stabilize the steeper sloped areas to ensure full vegetation is obtained. The topsoil stockpile is provided for a convenient place to stock onsite topsoil. Inlet/yard drain protection and rock filters will be used to prevent sedimentation of the storm sewer systems. Temporary orange construction fence will be used to ensure that sensitive areas are not disturbed.

Temporary seeding on all disturbed areas shall be done immediately after grading is finished and shall consist of the following:

Item	Rate
1. Agricultural grade limestone	1 ton / acre
2. Fertilizer 10-10-10	500 lbs. / acre
3. Annual ryegrass	40 lbs. / acre
4. Mulch (straw)	3 tons / acre

Permanent Control Measures

Permanent control measures include the stormwater infiltration basin, riprap aprons, swales, storm sewer systems, and seeding / landscaping. Seeding specifications are for graded or cleared areas where permanent vegetative cover is needed.

Soil Enhancements: It is recommended that site specific soil testing be performed. Lieu of soil test recommendations, use the following schedule:

1) Acceptable – Apply 6 tons per acre Dolomitic Limestone (240 lbs/ 1000 s.f.) and 1000 lbs/acre 10-20-20 (25 lbs/ 1000 s.f.) before seeding. Harrow or disc into upper three inches of soil.

Permanent Seeding shall consist of the following:

Item	Rate
1. Seed Mixture Consisting of	102 lbs./acre
50% Festuca arundinacea (Turf-Type Tall Fescue)	
50% Festuca rubra (Creeping Red Fescue)	
2. *Mulch (straw)	3 tons / acre

Infiltration Basin Bottom Seeding Mix (To be placed on the bottom and interior sides of the infiltration basin)

Item	Rate
1. Seed Mixture Consisting of:	30-40 lbs / acre
20% Elymus virginicus, (Virginia Wildrye, PA Ecotype)	
20% Festuca rubra (Creeping Red Fescue)	
17% Panicum virgatum (Switch Grass)	
17% Carex cephaloidea (Rough Clustered Sedge)	
22% Andropogon gerardii (Big Bluestem)	
3% Juncus effusus (Soft Rush)	
1% Juncus tenuis v. dudleyi (Dudley's Rush)	
2. *Mulch	3 tons / acre

*Mulching: Apply mulch immediately after seeding and anchor properly with an anchoring tool or following one of the methods listed below.

1) Tracking: The process of cutting mulch into the soil via equipment that runs on tracks, is employed primarily on slopes 3:1 or steeper.
2) Mulch Nettings: Staple lightweight biodegradable paper, plastic or cotton netting over the mulch according to the manufacturer's recommendations.
3) Synthetic Binders: Synthetic binders such as acrylic DLR (AGRI-TAC), DCA-70, Petroset or Terratack may be used at rates recommended by the manufacturer to anchor mulch material.
4) Wood Cellulose Fiber: The fiber binder shall be applied at a net dry weight of 750 lb/acre. The wood cellulose fiber shall be mixed with water, and the mixture shall contain a maximum of 50 lbs of wood cellulose fiber per 100 gallons.
5) Peg & Twine: Drive 8 to 10 inch wooden pegs to within 2 to 3 inches of the soil surface every 4 feet in all directions. Stakes may be driven before or after applying mulch. Secure mulch to surface by stretching twine between pegs in a criss-cross within a square pattern. Secure twine around each peg with two or more turns.

Maintenance Program

During construction, the contractor will be responsible for maintenance and repair of all erosion and sedimentation control facilities. These facilities should be inspected daily and after every runoff event. Any erosion control disturbed during construction, installation of utilities or found to be inadequate upon inspection shall be repaired or replaced within 24 hours after the disturbance or the discrepancy is discovered. The maintenance of the erosion control facilities will include the following:

During inspection of these facilities, written documentation for each inspection for all BMP repair, replacement, and/or maintenance activities shall be completed using the DEP Form 3800-FM-BCW0271d (A copy of this form is located in the Appendix of this report). Inspection reports should be kept onsite at all times.

Construction Entrance:

a. The entrance shall be maintained in a condition that will prevent tracking or flowing of sediment onto public rights-of-way. This may require periodic top dressing with additional stone as conditions demand and repair and/or cleanout of any measure used to trap sediment. All sediment spilled, dropped, washed or tracked onto public rights-of-way must be removed immediately. Sediment removed from the structure shall be spread over an existing stockpile with controls already in place and be seeded with the temporary seeding mixture.

Construction Entrance Rumble Pads:

a. Sufficient length of rumble pad shall be installed to provide a minimum of four tire rotations while on the pad.
b. More pads may be needed depending on site conditions.
c. Accumulated materials should be cleaned from the rumble pads daily (more if necessary) and disposed in the manner specified by the plan.

Silt Socks:

a. The Contractor shall maintain the socks in a functional condition at all times and it shall be routinely inspected.
b. Where the sock requires repair, it will be routinely repaired.
c. The contractor shall remove sediment collected at the base of the sock when they reach 1/2 of the exposed height of the sock, or as directed by the Engineer. Alternatively, rather than create a soil disturbing activity, the engineer may call for additional sock to be added at areas of high sedimentation, placed immediately on top of the existing sediment laden sock. The sock will be dispersed on site when no longer required, as determined by the Engineer.

Sediment Basin:

a. The sediment basin shall be stabilized with the temporary seeding mixture and maintained to ensure that it is structurally sound at all times. Sediment accumulation within the sediment basin shall be removed when it reaches the clean-out storage elevation as indicated on the E&SCP.

Topsoil Stockpile:

a. The topsoil stockpile shall be seeded with the temporary seeding mixture to ensure proper stabilization. Any additional topsoil spread at these locations shall also be seeded with the temporary seeding mixture.

Permanent Seeding:

a. If the vegetative cover is not established uniformly by the third mowing, the contractor shall reapply topsoil if necessary and seed and mulch as needed to provide adequate cover.

Inlet Protection:

a. Inlet filter bags should be inspected on a weekly basis and after each runoff event. Needed repairs should be initiated immediately after the inspection.
b. Filter bags should be cleaned and/or replaced when the bag is ½ full. Damaged bags should be replaced.

Yard Drain Protection:

a. Sediment shall be removed from the structure and spread over an existing stockpile with controls already in place and be seeded with the temporary seeding mixture.
b. The structure should be checked regularly to ensure its soundness. If the stone filter has been disturbed and cannot perform its proper protective function, additional stone should be installed to provide adequate filtration.

Rock Filter:

a. The rock filter shall be maintained in a condition that will allow for adequate filtration of the runoff through them. If the stone filter becomes clogged, it should be removed and used in grading operations. New stone should be added to the rock filter.

Recycling and Disposal of Materials

The operator shall remove from the site, recycle, or dispose of all building materials and wastes in accordance with the Department's Solid Waste Management Regulations at 25 PA. Code 260.1et seq., 271.1 et seq., and 287.1 et seq. The contractor shall not illegally bury, dump, or discharge any building material or wastes.

Wastes generated during the construction of this project shall be recycled if at all possible. Any materials that cannot be recycled or reused shall be disposed of at a Pennsylvania Department of Environmental Protection approved landfill. If soil and/or rock disposal areas are required, erosion and sedimentation controls shall be implemented at these areas. Any excess soil waste may only be disposed of at an approved E&S/NPDES permitted site.

Responsibilities for Fill Materials

The contractor is responsible to use environmental due diligence to ensure any fill material required to be imported to or exported from the site qualifies as Clean Fill.

Clean Fill is defined as: Uncontaminated, non-water soluble, non-decomposable, inert, solid material. The term includes soil, rock, stone, dredged material, used asphalt, and brick, block or concrete from construction and demolition activities that is separate from other waste and is recognizable as such. The term does not include materials placed in or on the waters of the commonwealth unless otherwise authorized. (The term "used asphalt" does not include milled asphalt or asphalt that has been processed for re-use.)

Environmental due diligence: Investigative techniques, including, but not limited to, visual property inspections, electronic data base searches, review of property ownership, review of property use history, Sanborn maps, environmental questionnaires, transaction screens, analytical testing, environmental assessments or audits. Analytical testing is not a required part of due diligence unless visual inspection and/or review of the past land use of the property indicates that the fill may have been subjected to a spill or release of regulated substance. If the fill may have been affected by a spill or release of a regulated substance, it must be tested to determine if it qualifies as clean fill. Testing should be performed in accordance with Appendix A of the Department's policy "Management of Fill".

Fill material that does not qualify as clean fill is regulated fill. Regulated fill is waste and must be managed in accordance with the Department's municipal or residual waste regulations based on 25 Pa. Code Chapters 287 Residual Waste management or 271 Municipal Waste Management, whichever is applicable.

PennTerra
ENGINEERING INC.

CENTRAL PENNSYLVANIA
REGION OFFICE:
3075 ENTERPRISE DRIVE
SUITE 100
STATE COLLEGE, PA 16801
PH: 814-231-8285
Fax: 814-237-2308

LANCASTER
REGION OFFICE:
3904 B ABEL DRIVE
COLUMBIA, PA 17512
PH: 717-522-5031
Fax: 717-522-5046

WWW.PENNTERRA.COM

COPYRIGHT 2021 BY THE ENGINEER
THE INFORMATION CONTAINED HEREON MAY NOT BE USED OR COPIED IN ANY MANNER WITHOUT THE WRITTEN PERMISSION OF THE ENGINEER EXCEPT AS OTHERWISE PROVIDED BY APPROPRIATE LAWS OR STATUTES.
© PENNTERRA ENGINEERING 2021
ALL RIGHTS RESERVED

COMMONWEALTH OF PENNSYLVANIA
REGISTERED PROFESSIONAL
C. ANTHONY FRUCHTL
ENGINEER
PE-062413

Designer	EAH
Draftsman	EAH
Proj.Manager	CAF
Surveyor	BRK
Perimeter Ck.	
Book	463 Pg 1
File	19286.01-ES-DETAILS-3
Layout	ES-DETAILS-3

Date	Description

REVISIONS

TOFTREES PLANNED COMMUNITY WEST MOUNT NITTANY HEALTH OUTPATIENT CENTER

PATTON TOWNSHIP
CENTRE COUNTY
PENNSYLVANIA

FINAL LAND DEVELOPMENT PLAN

EROSION AND SEDIMENTATION CONTROL DETAILS

PROJECT NO.	19286.01
DATE	NOVEMBER 5, 2021
SCALE	N.T.S.
SHEET NO.	ES10

P:\ddtproj\2019\19286\19286.01 - Phase 1\Design\plot files\final plans\19286.01-ES-DETAILS-3.dwg, 11/5/2021 11:34:04 AM, 1:1